18-20 COLONIAL ROAD

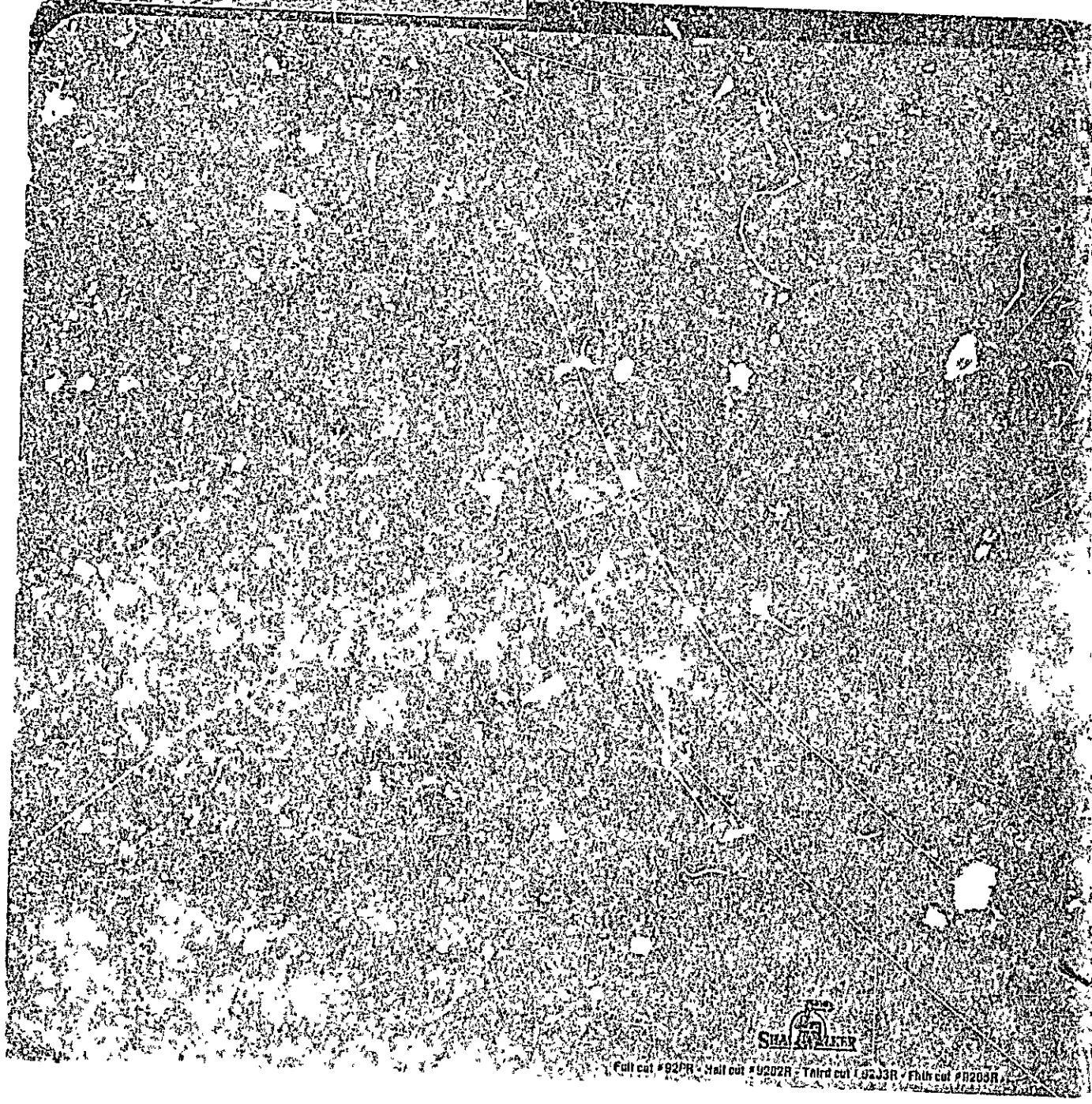

Full cut #9201R - Half cut #9202R - Third cut #9203R - Fifth cut #9205R

City of Portland, Maine
Fire Department

Agnes Racine

Pettingill Pond

N. Windham, ME

Re: Fire at 20 Colonial Rd.

Dear Mrs. Racine

On March 19, 1981 a fire occurred in the building listed above of which you are reported to be the owner ( ).

If permanent repair work is required for this building, you must obtain a permit from the Building & Inspection Department in City Hall before starting such work.

Very Truly Yours,

Chief
Portland Fire Department

cc: Building & Inspection Department
Corporation Counsel
Health Department (Housing Div)
City Assessor's (Mr. Lucci)

2½ story, wood frame. Fire confined to an oil spill on the basement floor.

FILL IN AND SIGN WITH INK

385

PERMIT ISSUED

MAY 12 1981

CITY of PORTLAND

APPLICATION FOR PERMIT FOR HEATING, COOKING OR POWER EQUIPMENT

Portland, Maine, May 11, 1981

To the INSPECTOR OF BUILDINGS, PORTLAND, ME.

The undersigned hereby applies for a permit to install the following heating, cooking or power equipment in accordance with the Laws of Maine, the Building Code of the City of Portland, and the following specifications:

Location 18 Colonial Rd Use of Building multi - 2 dwelling- No. Stories 2 New Building Existing "

Name and address of owner of appliance Agnes Racine - ~~xxxxx~~ Windham, Me. 892-4666

Installer's name and address Ballard Oil & Equip -135 Marginal Way Telephone 772-1991

General Description of Work

To install burner - replacement

IF HEATER, OR POWER BOILER

Location of appliance Any burnable material in floor surface or beneath?

If so, how protected? Kind of fuel?

Minimum distance to burnable material, from top of appliance or casing top of furnace

From top of smoke pipe From front of appliance From sides or back of appliance

Size of chimney flue Other connections to same flue

If gas fired, how vented? Rated maximum demand per hour

Will sufficient fresh air be supplied to the appliance to insure proper and safe combustion?

IF OIL BURNER

Name and type of burner Beckett - gun Labelled by underwriters' laboratories? yes

Will operator be always in attendance? no Does oil supply line feed from top or bottom of tank? bottom

Type of floor beneath burner concrete Size of vent pipe 1¼

Location of oil storage basement Number and capacity of tanks 1-275 gal.

Low water shut off none Make No.

Will all tanks be more than five feet from any flame? yes How many tanks enclosed? none

Total capacity of any existing storage tanks for furnace burners 275 gal.

IF COOKING APPLIANCE

Location of appliance Any burnable material in floor surface or beneath?

If so, how protected? Height of Legs, if any

Skirting at bottom of appliance? Distance to combustible material from top of appliance?

From front of appliance From sides and back From top of smokepipe

Size of chimney flue Other connections to same flue

Is hood to be provided? If so, how vented? Forced or gravity?

If gas fired, how vented? Rated maximum demand per hour

MISCELLANEOUS EQUIPMENT OR SPECIAL INFORMATION

Amount of fee enclosed? 5.00

cost of work 372. 5.50

10.50

APPROVED:

Will there be in charge of the above work a person competent to see that the State and City requirements pertaining thereto are observed?

CI 300

Signature of Installer Ralph Nobil # 1850 Jack Bogner

INSPECTION COPY

3A

Permit No. 81/385

Location 18 Colonial Rd

Owner Agnes Racine

Date of permit 5-11-81

Approved 5-12-81 burner replacement

NOTES

5-14-81 Contact site - they to get
5-18-81 same would take
hold of owner to set up phone to make
get hold of owner by phone later
Appt — will then order
5-26-81 same - will call
till owner or someone
let me in -

1. Gas shut off
2. Electric shut off
3. Electrical & Support
4. Electrical
5. Electrical
6. Electrical
7. Electrical
8. Non-metallic sheath
9. Lack of Continuity
10. Electrical Continuity rotection
11. Pipe
12. Valves
13. Gauges
14. Tank & Support
15. Oil
16. Instrument Board
17. oil leak
18. Adequate ventilation
18. Smokeless burner
20. Thermal Control switch

APPLICATION FOR PERMIT

DEPARTMENT OF BUILDING INSPECTIONS SERVICES

ELECTRICAL INSTALLATIONS

Date Dec. 1, 19 80
Receipt and Permit number A 59644

To the CHIEF ELECTRICAL INSPECTOR, *Portland, Maine:*
The undersigned hereby applies for a permit to make electrical installations in accordance with the laws of Maine, the Portland Electrical Ordinance, the National Electrical Code and the following specifications:

LOCATION OF WORK: 16 Colonial Rd.
OWNER'S NAME: Philip Whitlock ADDRESS: lives there

	FEES
OUTLETS:	
Receptacles ____ Switches ____ Plugmold ____ ft. TOTAL ____	
FIXTURES: (number of)	
Incandescent ____ Flourescent ____ (not strip) TOTAL ____	
Strip Flourescent ____ ft.	
SERVICES:	
Overhead X Underground ____ Temporary ____ TOTAL amperes 200	3.00
METERS: (number of) 1	.50
MOTORS: (number of)	
Fractional ____	
1 HP or over ____	
RESIDENTIAL HEATING:	
Oil or Gas (number of units) ____	
Electric (number of rooms) ____	
COMMERCIAL OR INDUSTRIAL HEATING:	
Oil or Gas (by a main boiler) ____	
Oil or Gas (by separate units) ____	
Electric Under 20 kws ____ Over 20 kws ____	
APPLIANCES: (number of)	
Ranges ____ Water Heaters ____	
Cook Tops ____ Disposals ____	
Wall Ovens ____ Dishwashers ____	
Dryers ____ Compactors ____	
Fans ____ Others (denote) ____	
TOTAL ____	
MISCELLANEOUS: (number of)	
Branch Panels ____	
Transformers ____	
Air Conditioners Central Unit ____	
Separate Units (windows) ____	
Signs 20 sq. ft. and under ____	
Over 20 sq. ft. ____	
Swimming Pools Above Ground ____	
In Ground ____	
Fire/Burglar Alarms Residential ____	
Commercial ____	
Heavy Duty Outlets, 220 Volt (such as welders) 30 amps and under ____	
over 30 amps ____	
Circus, Fairs, etc. ____	
Alterations to wires ____	
Repairs after fire ____	
Emergency Lights, battery ____	
Emergency Generators ____	
INSTALLATION FEE DUE:	
FOR ADDITIONAL WORK NOT ON ORIGINAL PERMIT ..... DOUBLE FEE DUE:	
FOR REMOVAL OF A "STOP ORDER" (304-16.b)	
TOTAL AMOUNT DUE:	3.50

INSPECTION:
Will be ready on ____, 19__; or Will Call X
CONTRACTOR'S NAME: Dennis Electric
ADDRESS: 5 Longfellow Drive, Cape Eliz
TEL.: 799-5218
MASTER LICENSE NO.: 3910 SIGNATURE OF CONTRACTOR: [signature]
LIMITED LICENSE NO.: ____

INSPECTOR'S COPY — WHITE
OFFICE COPY — CANARY
CONTRACTOR'S COPY — GREEN

ELECTRICAL INSTALLATION

Permit Number 59644

Location 16 Colonial Rd.

Owner G. Whitlock

Date of Permit 12-1-80

Final Inspection 12-5-80

By Inspector Libby

Permit Application Register Page No. 73

INSPECTIONS: Service ✓ by Libby

Service called in 12-8-80

Closing-in _____ by _____

PROGRESS INSPECTIONS: ____/____/____

____/____/____

____/____/____

____/____/____

____/____/____

____/____/____

CODE COMPLIANCE COMPLETED

DATE 12-5-80

DATE:	REMARKS:

CITY OF PORTLAND, MAINE
Application for Permit to Install Wires

Permit No. 55551
Issued 1/31/67

To the City Electrician, Portland, Maine: Portland, Maine ..... 19.....

The undersigned hereby applies for a permit to install wires for the purpose of conducting electric current, in accordance with the laws of Maine, the Electrical Ordinance of the City of Portland, and the following specifications:

(This form must be completely filled out — Minimum Fee, $1.00)

Owner's Name and Address Arthur Stevens
Contractor's Name and Address Lowell W. Weeks Tel. 773-2790
Location 18 Colonial Rd Tel. 781-3595
Number of Families 2 Apartments 1 Stores ..... Use of Building dwelling Number of Stories 2
Description of Wiring: New Work ✓ Additions ..... Alterations .....

Pipe ✓ Cable ..... Metal Molding ..... BX Cable ..... Plug Molding (No. of feet) .....
No. Light Outlets ..... Plugs ..... Light Circuits ..... Plug Circuits .....
FIXTURES: No. ..... Light Switches ..... Fluor. or Strip Lighting (No. feet) .....
SERVICE: Pipe ✓ Cable ..... Underground ..... N of Wires 3 Size #6
METLRS: Relocated ..... Added ..... Total No. Meters .....
MOTORS: Number ..... Phase ..... H. P. ..... Amps ..... Volts ..... Starter .....
HEATING UNITS: Domestic (Oil) ..... No. Motors ..... Phase ..... H.P. .....
Commercial (Oil) ..... No. Motors ..... Phase ..... H.P. .....
Electric Heat (No. of Rooms) .....
APPLIANCES: No. Ranges ..... Watts ..... Brand Feeds (Size and No.) .....
Elec. Heaters ..... Watts .....
Miscellaneous ..... Watts .....
Transformers ..... Air Conditioners (No. Units) ..... Extra Cabinets or Panels .....
Will commence 4 Feb 19 67 Ready to cover in ..... 19..... Signs (No. Units) .....
Amount of Fee $ 2.00 Inspection Feb 6 19 67

Signed Lowell W. Weeks

DO NOT WRITE BELOW THIS LINE

SERVICE ✓ METER ..... GROUND ✓
VISITS: 1 ..... 2 ..... 3 ..... 4 ..... 5 ..... 6 .....
7 ..... 8 ..... 9 ..... 10 ..... 11 ..... 12 .....
REMARKS:

CS 263

INSPECTED BY F.W. Hanlon

(OVER)

LOCATION Colonial Rd. 18

INSPECTION DATE 2/13/67

WORK COMPLETED 2/13/67

TOTAL NO. INSPECTIONS 2

REMARKS:

FEES FOR WIRING PERMITS EFFECTIVE JULY 31, 1963

WIRING

1 to 30 Outlets (including switches)	$ 2.00
31 to 60 Outlets (including switches)	3.00
Over 60 Outlets, each Outlet (including switches)	.05
(Each twelve feet or fraction thereof of fluorescent lighting or any type of plug molding will be classed as one outlet).	

SERVICES

Single Phase	2.00
Three Phase	4.00

MOTORS

Not exceeding 50 H.P.	3.00
Over 50 H.P.	4.00

HEATING UNITS

Domestic (Oil)	2.00
Commercial (Oil)	4.00
Electric Heat (Each Room)	.75

APPLIANCES

Ranges, Cooking Tops, Ovens, Water Heaters, Disposals, Dishwashers, etc. — Each Unit	1.50

TEMPORARY WORK (Limited to 6 months from date of permit)

Service, Single Phase	1.00
Service, Three Phase	2.00
Wiring, 1-50 Outlets	1.00
Wiring, each additional outlet over 50	.02
Circuses, Carnivals, Fairs, etc.	10.00

MISCELLANEOUS

Distribution Cabinet or Panel, per unit	1.00
Transformers, per unit	2.00
Air Conditioners, per unit	2.00
Signs, per unit	2.00

ADDITIONS

5 Outlets, or less	1.00
Over 5 Outlets, Regular Wiring Rates	

CITY OF PORTLAND, MAINE

Application for Permit to Install Wires

Permit No. 55063

Issued

Portland, Maine July 28, 1966

To the City Electrician, Portland, Maine:

The undersigned hereby applies for a permit to install wires for the purpose of conducting electric current, in accordance with the laws of Maine, the Electrical Ordinance of the City of Portland, and the following specifications:

(This form must be completely filled out — Minimum Fee, $1.00)

Owner's Name and Address Arthur H. Stevens, 18 Colonial Road, Portland

Contractor's Name and Address Ballard Oil & Equipment Co. Tel. 135 Marginal Way

Location 18 Colonial Rd., Port. Use of Building Residence

Number of Families ..... Apartments ..... Stores ..... Number of Stories .....

Description of Wiring: New Work X Additions ..... Alterations .....

Wiring of high pressure gun type burner and controls

Pipe .. Cable ..... Metal Molding ..... BX Cable ..... Plug Molding (No. of feet) .....

No. Light Outlets ..... Plugs ..... Light Circuits ..... Plug Circuits .....

FIXTURES: No. ..... Light Switches ..... Fluor. or Strip Lighting (No. feet) .....

SERVICE: Pipe ..... Cable ..... Underground ..... No. of Wires ..... Size .....

METERS: Relocated ..... Added ..... Total No. Meters .....

MOTORS: Number 1 Phase 1 H. P. 1/8 Amps 3.0 Volts 115 Starter .....

HEATING UNITS: Domestic (Oil) ..... No. Motors ..... Phase ..... H.P. .....

Commercial (Oil) No. Motors ..... Phase ..... H.P. .....

Electric Heat (No. of Rooms) .....

APPLIANCES: No. Ranges ..... Watts ..... Brand Feeds (Size and No.) .....

Elec. Heaters ..... Watts .....

Miscellaneous ..... Watts ..... Extra Cabinets or Panels .....

Transformers ..... Air Conditioners (No. Units) ..... Signs (No. Units) .....

Will commence 7-29-66 19. / Ready to cover in ..... 19 ..... Inspection 3-6- 19.66.

Amount of Fee $ 2.00

Ballard Oil & Equipment Co.

Signed L. W. Jordan

DO NOT WRITE BELOW THIS LINE

SERVICE ..... METER ..... GROUND .....

VISITS: 1 ..... 2 ..... 3 ..... 4 ..... 5 ..... 6 .....

7 ..... 8 ..... 9 ..... 10 ..... 11 ..... 12 .....

REMARKS:

INSPECTED BY [signature]

(OVER)

CS 203

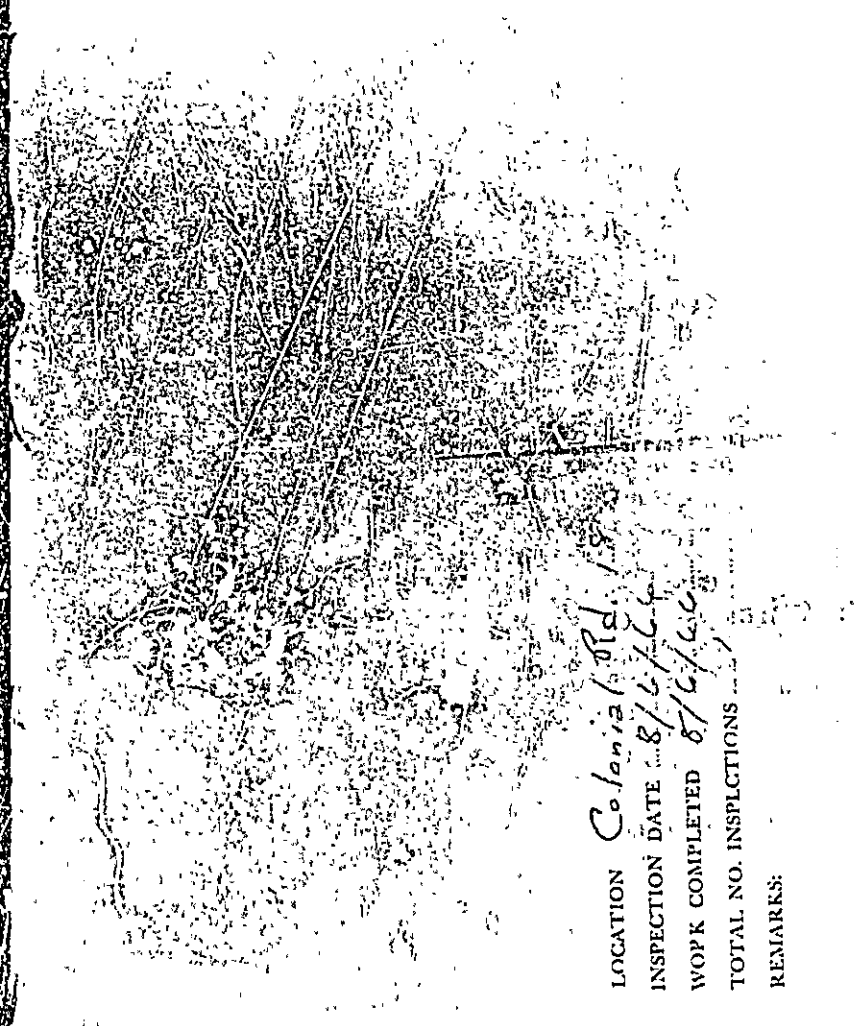

LOCATION Colonial Rd.

INSPECTION DATE 8/6/66

WORK COMPLETED 8/6/66

TOTAL NO. INSPECTIONS 1

REMARKS:

FEES FOR WIRING PERMITS EFFECTIVE JULY 31, 1963

WIRING		
1 to 30 Outlets	(including switches)	$ 2.00
31 to 60 Outlets	(including switches)	3.00
Over 60 Outlets, each Outlet	(including switches)	.05
(Each twelve feet or fraction thereof of fluorescent lighting or any type of plug molding will be classed as one outlet).		
SERVICES		
Single Phase		2.00
Three Phase		4.00
MOTORS		
Not exceeding 50 H.P		3.00
Over 50 H.P.		4.00
HEATING UNITS		
Domestic (Oil)		2.00
Commercial (Oil)		4.00
Electric Heat (Each Room)		.75
APPLIANCES		
Ranges, Cooking Tops, Ovens, Water Heaters, Disposals, Dish washers, etc. — Each Unit		1.50
TEMPORARY WORK (Limited to 6 months from date of permit)		
Service, Single Phase		1.00
Service, Three Phase		2.00
Wiring, 1-50 Outlets		1.00
Wiring, each additional outlet over 50		.02
Circuses, Carnivals, Fairs, etc.		10.00
MISCELLANEOUS		
Distribution Cabinet or Panel, per unit		1.00
Transformers, per unit		2.00
Air Conditioners, per unit		2.00
Signs, per unit		2.00
ADDITIONS		
5 Outlets, or less		1.00
Over 5 Outlets, Regular Wiring Rates		

FILL IN AND SIGN WITH INK

APPLICATION FOR PERMIT FOR HEATING, COOKING OR POWER EQUIPMENT

PERMIT ISSUED
(80/13)
AUG 4 1966
CITY OF PORTLAND

Portland, Maine, August 3 1966

To the INSPECTOR OF BUILDINGS, PORTLAND, ME.

The undersigned hereby applies for a permit to install the following heating, cooking or power equipment in accordance with the Laws of Maine, the Building Code of the City of Portland, and the following specifications:

Location 18 Colonial Road Use of Building Dwelling No. Stories 2 ~~New~~ Building Existing "

Name and address of owner of appliance Arthur H Stevens, 18 Colonial Road

Installer's name and address Ballard Oil & Equipment Co.135 Marginalway. Telephone

General Description of Work

To install Oil-fired domestic hot water heater, replacing electric tank.

IF HEATER, OR POWER BOILER

Location of appliance Basement Any burnable material in floor surface or beneath? none

If so, how protected? Kind of fuel? oil

Minimum distance to burnable material, from top of appliance or casing top of furnace 3'

From top of smoke pipe 2' From front of appliance 6' From sides or back of appliance 6'

Size of chimney flue 8x12 Other connections to same flue furnace

If gas fired, how vented? Rated maximum demand per hour

Will sufficient fresh air be supplied to the appliance to insure proper and safe combustion? yes

IF OIL BURNER

Name and type of burner Aldrich-guntyps Labelled by underwriters' laboratories? yes

Will operator be always in attendance? Does oil supply line feed from top or bottom of tank? bottom

Type of floor beneath burner concrete Size of vent pipe 3/4"

Location of oil storage basement Number and capacity of tanks 275 existing

Low water shut off Make No.

Will all tanks be more than five feet from any flame? yes How many tanks enclosed

Total capacity of any existing storage tanks for furnace burners

IF COOKING APPLIANCE

Location of appliance Any burnable material in floor surface or beneath

If so, how protected? Height of Legs, if any

Skirting at bottom of appliance? Distance to combustible material from top of appliance?

From front of appliance From sides and back From top of smokepipe

Size of chimney flue Other connections to same flue

Is hood to be provided? If so, how vented? Forced or gravity?

If gas fired, how vented? Rated maximum demand per hour

MISCELLANEOUS EQUIPMENT OR SPECIAL INFORMATION

Amount of fee enclosed? 2.00 ($2.00 for one heater, etc., $1.00 additional for each additional heater, etc., in same building at same time.)

APPROVED:
O.K. 8-3-66 [illegible]

Will there be in charge of the above work a person competent to see that the State and City requirements pertaining thereto are observed? yes

Ballard Oil & Equipment Co.

by: Ballard Oil & Eq. Jordan

Signature of Installer

Fm.

CS 330

INSPECTION COPY

Permit No. 66/209

Location 18 Colonial Road

Owner Arthur H. Clement

Date of permit 8/4/66

Approved 12/5/66 H. Montgomery Jr

NOTES

8-22-66 Not home left "Beacon Pressure Relief Valve"

Date Issued 8/3/66

Portland Plumbing Inspector

By ERNOLD R. GOODWIN

App. First Insp.

Date 8/4/66

By M. Montgomery

App. Final Insp.

Date AUG 5 - 1966

By ERNOLD R. GOODWIN

CHIEF PLUMBING INSPECTOR

Type of Bldg.

- ☐ Commercial
- ☑ Residential
- ☑ Single
- ☐ Multi Family
- ☐ New Construction
- ☑ Remodeling

PERMIT TO INSTALL PLUMBING

Address 18 Colonial Road — PERMIT NUMBER 16460

Installation For: Dwelling

Owner of Bldg.: Arthur H. Stevens

Owner's Address: 18 Colonial Road, Portland, Maine

Plumber: W. F. Cunningham — Date: 8/3/66

NEW	REPL.		NO.	FEE
		SINKS		
		LAVATORIES		
		TOILETS		
		BATH TUBS		
		SHOWERS		
		DRAINS FLOOR SURFACE		
		HOT WATER TANKS		
		TANKLESS WATER HEATERS		
		GARBAGE DISPOSALS		
		SEPTIC TANKS		
		HOUSE SEWERS		
		ROOF LEADERS		
		AUTOMATIC WASHERS		
		DISHWASHERS		
		OTHER		
1		OIL FIRED 30 gal. water heater	1	2.00
		TOTAL	1	2.00

Building and Inspection Services Dept.: Plumbing Inspection

FILL IN AND SIGN WITH INK

APPLICATION FOR PERMIT FOR HEATING, COOKING OR POWER EQUIPMENT

PERMIT ISSUED
No. 17221
NOV 17 1959
CITY of PORTLAND

Portland, Maine, Nov. 17, 1959

To the INSPECTOR OF BUILDINGS, PORTLAND, ME.

The undersigned hereby applies for a permit to install the following heating, cooking or power equipment in accordance with the Laws of Maine, the Building Code of the City of Portland, and the following specifications:

Location 20 Colonial Road Use of Building residence No. Stories 2 New Building/Existing

Name and address of owner of appliance Mr. Arthur H. Stevens, 18 Colonial Rd.

Installer's name and address Ballard Oil & Equip. Co., 135 Marginal Way Telephone

General Description of Work

To install oil-fired steam heating system and oil burning equipment(replacement)

INSPECTOR'S CERTIFICATE

IF HEATER, OR POWER BOILER

Location of appliance basement Any burnable material in floor surface or beneath? no

If so, how protected? Kind of fuel? oil

Minimum distance to burnable material, from top of appliance or casing top of furnace

From top of smoke pipe 3' From front of appliance 6' From sides or back of appliance 2'

Size of chimney flue 12x12 Other connections to same flue stove

If gas fired, how vented? Rated maximum demand per hour

Will sufficient fresh air be supplied to the appliance to insure proper and safe combustion?

IF OIL BURNER

Name and type of burner 1-BD. Esso. high pressure gun type Labelled by underwriters' laboratories? yes

Will operator be always in attendance? Does oil supply line feed from top or bottom of tank? bottom

Type of floor beneath burner xxxxxxx Size of vent pipe 1¼"

Location of oil storage basement Number and capacity of tanks 275 existing

Low water shut off Make McDonnell Miller No. 469

Will all tanks be more than five feet from any flame? yes How many tanks enclosed?

Total capacity of any existing storage tanks for furnace burners

IF COOKING APPLIANCE

Location of appliance Any burnable material in floor surface or beneath?

If so, how protected? Height of Legs, if any

Skirting at bottom of appliance? Distance to combustible material from top of appliance?

From front of appliance From sides and back From top of smokepipe

Size of chimney flue Other connections to same flue

Is hood to be provided? If so, how vented?

If gas fired, how vented? Forced or gravity?

Rated maximum demand per hour

MISCELLANEOUS EQUIPMENT OR SPECIAL INFORMATION

Amount of fee enclosed? 2.00 ($2.00 for one heater, etc., 50 cents additional for each additional heater, etc., in same building at same time.)

APPROVED
OK 11-17-59

Will there be in charge of the above work a person competent to see that the State and City requirements pertaining thereto are observed? yes

Ballard Oil & Equip Co
Thomas Lauber

Signature of Installer

CS 300

INSPECTION COPY

F M Thomas

12-15

Permit No. 59/1154

Location

Owner

Date of permit

Approved

INSPECTION

12-3-59 Inspected Bldg

12-10-59 Inspected Bldg

NOTES

INSPECTION COPY

FILL IN AND SIGN WITH INK

APPLICATION FOR PERMIT FOR HEATING, COOKING OR POWER EQUIPMENT

PERMIT ISSUED
APR 1 1958
CITY of PORTLAND

Portland, Maine, March 31, 1958

To the INSPECTOR OF BUILDINGS, PORTLAND, ME.

The undersigned hereby applies for a permit to install the following heating, cooking or power equipment in accordance with the Laws of Maine, the Building Code of the City of Portland, and the following specifications:

Location 18 Colonial Rd. Use of Building Residence No. Stories 2 New Building X Existing "

Name and address of owner of appliance Arthur H. Stevens 18 Colonial Road

Installer's name and address Ballard Oil & Equipment Co. Telephone

General Description of Work

To install conversion oil burner in existing steam boiler

IF HEATER, OR POWER BOILER

Location of appliance Any burnable material in floor surface or beneath?

If so, how protected? Kind of fuel?

Minimum distance to burnable material, from top of appliance or casing top of furnace

From top of smoke pipe From front of appliance From sides or back of appliance

Size of chimney flue Other connections to same flue

If gas fired, how vented? Rated maximum demand per hour

Will sufficient fresh air be supplied to the appliance to insure proper and safe combustion?

IF OIL BURNER

Name and type of burner Ballard GunType Model SC Labelled by underwriters' laboratories? Yes

Will operator be always in attendance? No Does oil supply line feed from top or bottom of tank? Bottom

Type of floor beneath burner Concrete Size of vent pipe 1 1/4"

Location of oil storage Basement Number and capacity of tanks 1-275 existing

Low water shut off Make McDonnell & Miller No. #169

Will all tanks be more than five feet from any flame? Yes How many tanks enclosed? None

Total capacity of any existing storage tanks for furnace burners 1 275 existing

IF COOKING APPLIANCE

Location of appliance Any burnable material in floor surface or beneath?

If so, how protected? Height of Legs, if any

Skirting at bottom of appliance? Distance to combustible material from top of appliance?

From front of appliance From sides and back From top of smokepipe

Size of chimney flue Other connections to same flue

Is hood to be provided? If so, how vented?

If gas fired, how vented? Forced or gravity?

Rated maximum demand per hour

MISCELLANEOUS EQUIPMENT OR SPECIAL INFORMATION

Replacing old oil burner

Amount of fee enclosed? $2.00 ($2.00 for one heater, etc., 50 cents additional for each additional heater, etc., in same building at same time.)

APPROVED: 3-31-58

Will there be in charge of the above work a person competent to see that the State and City requirements pertaining thereto are observed?

BALLARD OIL & EQUIPMENT CO.

CITY PRINTING CO. MAINE

INSPECTION COPY

Signature of Installer

Richard J. Cole, Manager
Oil Heating Department

4-7

A-3

Permit No. 58/296

Location 18 Colonial Road

Owner Arthur Whitehouse

Date of permit 4/1/58

Approved 4-3-58

1 Fill [illegible]
2 Vent Pipe
3 Earth [illegible]
4 Dart [illegible]
5 Name [illegible]
6 Stack [illegible]
7 Rigid Link [illegible]
8 Remote Control
9 Piping Support & Protection
10 Valve in Supply Line
11 Capacity of Tank
12 Tank Stability & Supports
13 Tank Diameter
14 Oil Gauge
Inspection Card

Stamp

NOTES

Inquiry 118 Colonial Rd.

September 30, 1952

Mr. Charles C. Nicely,
1041 Brighton Avenue,
Portland, Maine

Dear Mr. Nicely:

In regard to your inquiry concerning the question of constructing an outside fireplace chimney on the side towards Capisic Street of the dwelling at 118 Colonial Road, we find that, according to the location plan filed with the application for permit for construction of the building, the minimum allowable side yard clearance of five feet from the lot line was provided on this side of the building. This being the case, we would not be able to issue a permit for the projection of an outside chimney any distance whatsoever into this existing side yard.

As is the case with other requirements of the Zoning Ordinance, this question is subject to appeal. Although we cannot tell in advance what action the Board of Appeals might take on a request from you that relief be granted from compliance with the precise terms of the Ordinance in this particular case, you have the right to exercise your appeal rights if you desire to do so. In such a case the procedure to follow is to file an application for a building permit to erect the chimney, issuance of which we shall have to deny because of the reason stated above. Knowing that you wish to appeal, we will then send you a letter denying issuance of the permit, enclosing an outline of the appeal procedure, and authorizing action by the Corporation Counsel in assisting you to file the appeal.

Very truly yours,

Inspector of Buildings

AJS/H

INQUIRY BLANK

ZONE _____

FIRE DIST. _____

CITY OF PORTLAND, MAINE
DEPARTMENT OF BUILDING INSPECTION

Verbal
~~By Telephone~~

Date 9/29/52

LOCATION 118 Colonial Rd. OWNER Charles C. Nicholl

MADE BY Same TEL. ✓

ADDRESS

PRESENT USE OF BUILDING Dwelling

CLASS OF CONSTRUCTION 2d ✓ NO. OF STORIES

REMARKS:

INQUIRY: Can an outside fireplace chimney be constructed on the side of the house toward Cape Cod St?

ANSWER: See letter attached.

DATE OF REPLY 9/29/52 REPLY BY AJS

BI 76

Receipt—Applicant's Copy

not paid

CITY OF PORTLAND, MAINE

Department of Building Inspection

94 F

Jan. 18, 1950

Received from Samuel Allen, Jr. a fee

of Two — 00/100 Dollars $ 2.00

for permit to ~~install~~ ~~erect~~ alter ~~move~~ ~~demolish~~ dwelling

at 18 Colonial Road Est. Cost $150

Harry M. Donald

Inspector of Buildings

Per

THIS IS NOT A PERMIT

No work is to be started until PERMIT CARD is actually posted upon the premises. Acceptance of fee is no guarantee that permit will be granted. PRESERVE THIS RECEIPT. In case permit cannot be granted the amount of the fee will be refunded upon return of the receipt.

APPLICATION FOR PERMIT

Class of Building or Type of Structure Third Class

Portland, Maine, January 18, 1950

To the INSPECTOR OF BUILDINGS, PORTLAND, MAINE

The undersigned hereby applies for a permit to ~~erect alter repair demolish~~ the following building ~~structure~~ in accordance with the Laws of the State of Maine, the Building Code and Zoning Ordinance of the City of Portland, plans and specifications, if any, submitted herewith and the following specifications:

Location 18 Colonial Road Within Fire Limits? no Dist. No.

Owner's name and address Samuel Allen, Jr., 18 Colonial Road Telephone 4-0175

Lessee's name and address Telephone

Contractor's name and address Owner Telephone

Architect Specifications Plans no No. of sheets

Proposed use of building Duplex dwelling house No. families 2

Last use " " " No. families 2

Material wood No. stories 2½ Heat Style of roof Roofing

Other buildings on same lot

Estimated cost $ 150. Fee $ 2.00

General Description of New Work

To finish off room on third floor approximately 15' x 18' for recreational room.
Walls will be covered with celotex and provide celotex ceiling.
One stairway existing to third floor on this side of building.

It is understood that this permit does not include installation of heating apparatus which is to be taken out separately by and in the name of the heating contractor. ***PERMIT TO BE ISSUED TO*** owner

Details of New Work

Is any plumbing involved in this work? Is any electrical work involved in this work?

Height average grade to top of plate Height average grade to highest point of roof

Size, front depth No. stories solid or filled land? earth or rock?

Material of foundation Thickness, top bottom cellar

Material of underpinning Height Thickness

Kind of roof Rise per foot Roof covering

No. of chimneys Material of chimney of lining Kind of heat fuel

Framing lumber—Kind Dressed or full size?

Corner posts Sills Girt or ledger board? Size

Girders Size Columns under girders Size Max. on centers

Studs (outside walls and carrying partitions) 2x4-16" O. C. Bridging in every floor and flat roof span over 8 feet

Joists and rafters: 1st floor, 2nd, 3rd, roof

On centers: 1st floor, 2nd, 3rd, roof

Maximum span: 1st floor, 2nd, 3rd, roof

If one story building with masonry walls, thickness of walls? height?

If a Garage

No. cars now accommodated on same lot, to be accommodated number commercial cars to be accommodated

Will automobile repairing be done other than minor repairs to cars habitually stored in the proposed building?

APPROVED:

Miscellaneous

Will work require disturbing of any tree on a public street? no

Will there be in charge of the above work a person competent to see that the State and City requirements pertaining thereto are observed? yes

INSPECTION COPY

Signature of owner Samuel Allen Jr.

FILL IN AND SIGN WITH INK

APPLICATION FOR PERMIT FOR HEATING, COOKING OR POWER EQUIPMENT

PERMIT ISSUED
00536
APR 20 1948
CITY of PORTLAND

Portland, Maine, April 20, 1948

To the INSPECTOR OF BUILDINGS, PORTLAND, MAINE

The undersigned hereby applies for a permit to install the following heating, cooking or power equipment in accordance with the Laws of Maine, the Building Code of the City of Portland, and the following specifications:

Location 18 Colonial Road Use of Building Dwelling No. Stories 2 New Building / Existing "

Name and address of owner of appliance Sam Allen, Jr., 18 Colonial Road

Installer's name and address Arthur Moulton, 21 Roberts Street Telephone 4-2711

General Description of Work

~~To install~~ To Replace steam boiler

IF HEATER, OR POWER BOILER

Location of appliance or source of heat Cellar Type of floor beneath appliance Concrete

If wood, how protected? Kind of fuel Oil

Minimum distance to wood or combustible material, from top of appliance or casing top of furnace 4'

From top of smoke pipe 4' From front of appliance over 4' From sides or back of appliance 36" one side over 4' on other side

Size of chimney flue 8x8 Other connections to same flue Another boiler

If gas fired, how vented? Rated maximum demand per hour

IF OIL BURNER

Name and type of burner Labelled by underwriter's laboratories?

Will operator be always in attendance? Does oil supply line feed from top or bottom of tank?

Type of floor beneath burner

Location of oil storage Number and capacity of tanks

If two 275-gallon tanks, will three-way valve be provided?

Will all tanks be more than five feet from any flame? How many tanks fire proofed?

Total capacity of any existing storage tanks for furnace burners

IF COOKING APPLIANCE

Location of appliance Kind of fuel Type of floor beneath appliance

If wood, how protected?

Minimum distance to wood or combustible material from top of appliance

From front of appliance From sides and back From top of smokepipe

Size of chimney flue Other connections to same flue

Is hood to be provided? If so, how vented?

If gas fired, how vented? Rated maximum demand per hour

MISCELLANEOUS EQUIPMENT OR SPECIAL INFORMATION

Amount of fee enclosed? 1.00 ($1.00 for one heater, etc., 50 cents additional for each additional heater, etc., in same building at same time.)

APPROVED: OK 4-20-48

Will there be in charge of the above work a person competent to see that the State and City requirements pertaining thereto are observed? Yes

INSPECTION COPY

Signature of Installer Arthur H. Moulton

Permit No. 48/536

Location 18 Colonial Rd

Owner Sam Allen, Jr.

Date of Permit 4/21/48

Approved [illegible]

NOTES

FILL IN COMPLETELY AND SIGN WITH INK

PERMIT 0117
PERMIT ISSUED
FEB 8 1940

APPLICATION FOR PERMIT FOR HEATING, COOKING OR POWER EQUIPMENT

To the INSPECTOR OF BUILDINGS, PORTLAND, ME. *Portland, Maine,* ~~February 3, 1940~~

The undersigned hereby applies for a permit to install the following heating, cooking or power equipment in accordance with the Laws of Maine, the Building Code of the City of Portland, and the following specifications:

Location 18 Colonial Road (-21) Use of Building dwelling house No. Stories 2 ~~New Building~~ Existing "

Name and address of owner of appliance S. N. Allen, 95 Hastings Street

Installer's name and add ess ~~Owner~~ Telephone 2-3797

General Description of Work

To install steam heating system

IF HEATER, POWER BOILER OR COOKING DEVICE

Is appliance or source of heat to be in cellar? yes If not, which story _____ Kind of Fuel Oil

Material of supports of appliance (concrete floor or what kind) concrete

Minimum distance to wood or combustible material, from top of appliance or casing top of furnace 4'

from top of smoke pipe 5' from front of appliance 4' from sides or back of appliance 4'

Size of chimney flue 8x12 Other connections to same flue steam heat

IF OIL BURNER

Name and type of burner _____ Labeled and approved by Underwriters' Laboratories? _____

Will operator be always in attendance? _____ Type of oil feed (gravity, pressure) _____

Location oil storage _____ No. and capacity of tanks _____

Will all tanks be more than seven feet from any flame? _____ How many tanks fire proofed? _____

Amount of fee enclosed? 1.00 ($1.00 for one heater, etc., 50 cents additional for each additional heater, etc., in same building at same time.)

INSPECTION COPY

Signature of Installer S. N. Allen
By [signature]

Sec 39/2-31

Permit No. 40/117

Location 18 Colonial Road

Owner S. N. Allen

Date of Permit 2/3/40

Post Card sent

Notif. for inspn.

Approval Tag issued 2/12/40

Oil Burner Check List (date)

1. Kind of heat
2. Label
3. Anti-siphon
4. Oil storage
5. Tank distance
6. Vent Pipe
7. Fill Pipe
8. Gauge
9. Rigidity
10. Feed safety
11. Pipe sizes and material
12. Control valve
13. Ash pit vent
14. Temp. or pressure safety
15. Instruction card
16.

NOTES

P.39/2031-I
P. 40/48-I

January 23, 1940

Mr. Samuel N. Allen,
94 Hastings Street,
Portland, Maine

Dear Sir:

With relation to your building at 18 Colonial Road, Halverson Bros. have secured a permit to cover the installation of two oil burners, one in connection with an existing steam heating plant and the other to be a part of a new steam heating system.

No permit has been applied for as required for the installation of the steam system, though we find that the boiler has been set in the cellar and the steam pipes at least are being connected.

In case of more than one party working on a job, we consider that a permit is to be taken out by the person, firm or corporation which connects the boiler to the chimney.

Will you be kind enough to see that this additional permit is applied for and secured without delay, before the job is carried any further?

Very truly yours,

Inspector of Buildings

MJcD/H

CC: Halverson Bros.
15 Union Street

FILL IN COMPLETELY AND SIGN WITH INK

PERMIT ISSUED
Permit No. 0018

APPLICATION FOR PERMIT FOR HEATING, COOKING OR POWER EQUIPMENT

Portland, Maine, January 15, 1940

To the INSPECTOR OF BUILDINGS, PORTLAND, ME.

The undersigned hereby applies for a permit to install the following heating, cooking or power equipment in accordance with the Laws of Maine, the Building Code of the City of Portland, and the following specifications:

Location 18-20 Colonial Road Use of Building Dwelling House No. Stories 2 ~~New Building~~ Existing "

Name and address of owner of appliance St. K. Allen, 94 Hartings St.

Installer's name and address Halverson Bros. 9-15 Union St. Telephone 3-3732

General Description of Work

To install (2) Oil Burning Equipment in connection with existing steam heat and with new steam system to be installed

IF HEATER, POWER BOILER OR COOKING DEVICE

Is appliance or source of heat to be in cellar? yes If not, which story Kind of Fuel Oil

Material of supports of appliance (concrete floor or what kind) concrete

Minimum distance to wood or combustible material, from top of appliance or casing top of furnace,

from top of smoke pipe from front of appliance from sides or back of appliance

Size of chimney flue Other connections to same flue

IF OIL BURNER

Name and type of burner Torridheat Model G Labeled and approved by Underwriters' Laboratories? yes

Will operator be always in attendance? Type of oil feed (gravity or pressure) pressure

Location oil storage basement No. and capacity of tanks 1- 275 gal. for each

Will all tanks be more than seven feet from any flame? yes How many tanks fireproofed?

Amount of fee enclosed? 1.00 ($1.00 for one heater, etc., 50 cents additional for each additional heater, etc., in same building at same time.)

Signature of Installer Halverson Bros. By Sterling E. Brown

INSPECTION COPY

Sec 39/2031

Permit No. 40/48

Location 18-20 Colonial Road

Owner S. N. Allen

Date of Permit 11/16/40

Post Card sent

Notif. for inspn.

Approval Tag issued 2/12/40

Oil Burner Check List (date) 2/12/40

1. Kind of heat	Steam	✓
2. Label	✓	✓
3. Anti-siphon	✓	✓
4. Oil storage	✓	✓
5. Tank distance	✓	✓
6. Vent Pipe	✓	✓
7. Fill Pipe	✓	✓
8. Gauge	✓	✓
9. Rigidity	✓	✓
10. Feed safety	✓	✓
11. Pipe sizes and material	✓	✓
12. Control valve	✓	✓
13. Ash pit vent	—	—
14. Temp. or pressure safety	✓	✓
15. Instruction card	✓	✓
16.		

NOTES

1/15/40. Pr-work started

1/30/40 - Better advise
[illegible] without permit [illegible].

P.33/2081-I
P. 43/48-I

January 30, 1940

Mr. Samuel M. Allen,
94 Hastings Street,
Portland, Maine

Dear Sir:

With relation to your building at 18 Colonial Road, Halvorson Bros. have secured a permit to cover the installation of two oil burners, one in connection with an existing steam heating plant and the other to be a part of a new steam heating system.

No permit has been applied for as required for the installation of the steam system, though we find that the boiler has been set in the cellar and the steam pipes at least are being connected.

In case of more than one party working on a job, we consider that a permit is to be taken out by the person, firm or corporation which connects the boiler to the chimney.

Will you be kind enough to see that this additional permit is applied for and secured without delay, before the job is carried any farther?

Very truly yours,

WMcD/H

Inspector of Buildings

CC: Halvorson Bros.
45 Union Street

GENERAL RESIDENCE ZONE

APPLICATION FOR PERMIT

Permit No. 39/1

Class of Building or Type of Structure

NOV 10 1939

Portland, Maine, November 7, 1939

To the INSPECTOR OF BUILDINGS, PORTLAND, ME.

The undersigned hereby applies for a permit to ~~erect~~ alter ~~install~~ the following building ~~structure equipment~~ in accordance with the Laws of the State of Maine, the Building Code of the City of Portland, plans and specifications, if any, submitted herewith and the following specifications:

Location 18 Colonial Road Within Fire Limits? no Dist. No.

Owner's or ~~lessee's~~ name and address Samuel Allen, 94 Hastings St. Telephone

Contractor's name and address Karl Furst, 19 Inverness St. Telephone 3-3391

Architect Plans filed yes No. of sheets 2

Proposed use of building dwelling house No. families 2

Other buildings on same lot

Estimated cost $ 1,000. Fee $ 1.00

Description of Present Building to be Altered

Material wood No. stories 2 Heat steam Style of roof pitch Roofing asphalt

Last use dwelling house No. families 1

General Description of New Work

18 Colonial Road-11/10/39-To Karl Furst and Samuel N. Allen
94 Hastings St.

Dear Mr. Furst:

I understand that you are to introduce whatever supporting girders, posts, etc. that are necessary to comply with Building Code requirements as to strength including a 6x8 through the center of the building supoted by posts and additional posts under a built up 6x8 in the cellar which you say is on a 12-foot span.

Details of New Work

Is any plumbing work involved in this work? yes

Is any electrical work involved in this work? yes Height average grade to top of plate

Size, front depth No. stories Height average grade to nighest point of roof

To be erected on solid or filled land? earth or rock?

Material of foundation Thickness, top bottom cellar

Material of underpinning Height Thickness

Kind of Roof Rise per foot Roof covering

No. of chimneys Material of chimneys of lining

Kind of heat Type of fuel Is gas fitting involved?

Framing Lumber—Kind Dressed or Full Size?

Corner posts Sills Girt or ledger board? Size

Material columns under girders Size Max. on centers

Studs (outside walls and carrying partitions) 2x4-16" O. C. Girders 6x8 or larger. Bridging in every floor and flat roof span over 8 feet. Sills and corner posts all one piece in cross section.

Joists and rafters: 1st floor, 2nd, 3rd, roof

On centers: 1st floor, 2nd, 3rd, roof

Maximum span: 1st floor, 2nd, 3rd, roof

If one story building with masonry walls, thickness of walls? height?

If a Garage

No. cars now accommodated on same lot, to be accommodated

Total number commercial cars to be accommodated

Will automobile repairing be done other than minor repairs to cars habitually stored in the proposed building?

Miscellaneous

Will above work require removal or disturbing of any shade tree on a public street? no

Will there be in charge of the above work a person competent to see that the State and City requirements pertaining thereto are observed? yes

Signature of owner Samuel Allen

By Karl Furst

INSTRUCTION COPY

3435

Permit No. 39/2031

Location 18 Colonial Road

Owner Samuel Allen

Date of permit 11/10/39

Notif. closing-in 12/22/39 for 12/26/39

Inspn. closing-in 12/28/39 - O.K.

Final Notif.

Final Inspn. 2/12/40 - O.K.

Cert. of Occupancy issued 2/13/40

NOTES

11/14/39 [illegible]

11/20/39 [illegible]

11/29/39 - [illegible]

[illegible]

12/4/39 [illegible]

done - O.K.

12/1/39 - [illegible]

12/12/39 [illegible]

12/[illegible] [illegible]

1/3/40 - Plastering done

O.K.

1/10/40 - [illegible]

[illegible] - O.K.

1/30/40 - Letter about

[illegible]

2/10/40 - No one working

O.K.

912751

Permit # _____ City of Portland BUILDING PERMIT APPLICATION Fee $25. Zone _____ Map # _____ Lot# _____

Please fill out any part which applies to job. Proper plans must accompany form.

Owner: Agnes S. Racine Phone # 892-4666

Address: P O Box 743, No Windham, ME 04062

LOCATION OF CONSTRUCTION 18-20 Colonial Rd.

Contractor: Owen Perry Mary Maescher Sub.: 772-7494

Address: 20 Colonial Rd; Ptld, ME Phone # 04102

Est. Construction Cost: $950 Proposed Use: 2-fam w shed

Past Use: _____

# of Existing Res. Units _____ # of New Res. Units _____

Building Dimensions L _____ W _____ Total Sq. Ft. _____

Stories: _____ # Bedrooms _____ Lot Size: _____

Is Proposed Use: Seasonal _____ Condominium _____ Conversion _____

Explain Conversion Demolish garage & Construct shed - 6'x4'

For Official Use Only

Date 6/19/91 Subdivision _____

Inside Fire Limits _____

Bldg Code _____

Time Limit _____ Ownership: Public

Estimated Cost $950

PERMIT ISSUED JUN 25 1991 CITY OF PORTLAND

Zoning: R-5 Residence

Street Frontage Provided: _____

Provided Setbacks: Front _____ Back _____ Side _____ Side _____

Review Required:

Zoning Board Approval: Yes ____ No ____ Date: _____

Planning Board Approval: Yes ____ No ____ Date: _____

Conditional Use: _____ Variance _____ Site Plan _____ Subdivision _____

Shoreland Zoning Yes ____ No ____ Floodplain Yes ____ No ____

Special Exception _____

Other: _____ (Explain) _____ 6-24-91

HISTORIC PRESERVATION

~~Not in District nor Landmark.~~

~~Does not require review.~~

Requires Review.

Action ___ Approved

~~Approved with Conditions~~

~~Denied~~

Date _____

Signature _____

Foundation:

1. Type of Soil: _____
2. Set Backs - Front _____ Rear _____ Side(s) _____
3. Footings Size: _____
4. Foundation Size: _____
5. Other _____

Floor:

1. Sills Size: _____ Sills must be anchored.
2. Girder Size: _____
3. Lally Column Spacing: _____ Size: _____
4. Joists Size: _____ Spacing 16" O.C.
5. Bridging Type: _____ Size: _____
6. Floor Sheathing Type: _____ Size: _____
7. Other Material: _____

Exterior Walls:

1. Studding Size _____ Spacing _____
2. No. windows _____
3. No. Doors _____
4. Header Sizes _____ Span(s) _____
5. Bracing: Yes _____ No. _____
6. Corner Posts Size _____
7. Insulation Type _____ Size _____
8. Sheathing Type _____ Size _____
9. Siding Type _____ Weather Exposure _____
10. Masonry Materials _____
11. Metal Materials _____

Interior Walls:

1. Studding Size _____ Spacing _____
2. Header Sizes _____ Span(s) _____
3. Wall Covering Type _____
4. Fire Wall if required _____
5. Other Materials _____

Ceiling:

1. Ceiling Joists Size: _____
2. Ceiling Strapping Size _____ Spacing _____
3. Type Ceilings: _____
4. Insulation Type _____ Size _____
5. Ceiling Height: _____

Roof:

1. Truss or Rafter Size _____ Span _____
2. Sheathing Type _____ Size _____
3. Roof Covering Type _____

Chimneys:

Type: _____ Number of Fire Places _____

Heating:

Type of Heat: _____

Electrical:

Service Entrance Size: _____ Smoke Detector Required Yes ____ No ____

Plumbing:

1. Approval of soil test if required Yes _____ No _____
2. No. of Tubs or Showers _____
3. No. of Flushes _____
4. No. of Lavatories _____
5. No. of Other Fixtures _____

Swimming Pools:

1. Type: _____
2. Pool Size: _____ x _____ Square Footage _____
3. Must conform to National Electrical Code and State Law.

Permit Issued By Louise E. Chase

Signature of Applicant Mary L. Maescher Date 6-19-91

Signature of CEO _____ Date _____

Inspection Dates _____

PERMIT ISSUED WITH REQUIREMENTS

PERMIT ISSUED WITH REQUIREMENTS

White-Tax Assesor Yellow-GPCOG White Tag-CEO

M.Carvde

APPLICATION FOR PERMIT

DEPARTMENT OF BUILDING INSPECTIONS SERVICES

ELECTRICAL INSTALLATIONS

Date November 30, 1992, 19
Receipt and Permit number 6207

To the CHIEF ELECTRICAL INSPECTOR, *Portland, Maine:*

The undersigned hereby applies for a permit to make electrical installations in accordance with the laws of Maine, the Portland Electrical Ordinance, the National Electrical Code and the following specifications:

LOCATION OF WORK: 20 Colonial Rd

OWNER'S NAME: Agnes Racine ADDRESS:

	FEES
OUTLETS:	
Receptacles 7 Switches ____ Plugmold ____ ft. TOTAL ____	1.40
FIXTURES: (number of)	
Incandescent ____ Flourescent ____ (not strip) TOTAL ____	
Strip Flourescent ____ ft.	
SERVICES:	
Overhead X Underground ____ Temporary ____ TOTAL amperes 100 each	30.00
METERS: (number of) 2	2.00
MOTORS: (number of)	
Fractional ____	
1 HP or over ____	
RESIDENTIAL HEATING:	
Oil or Gas (number of units) ____	
Electric (number of rooms) ____	
COMMERCIAL OR INDUSTRIAL HEATING:	
Oil or Gas (by a main boiler) ____	
Oil or Gas (by separate units) ____	
Electric Under 20 kws ____ Over 20 kws ____	
APPLIANCES: (number of)	
Ranges ____ Water Heaters ____	
Cook Tops ____ Disposals ____	
Wall Ovens ____ Dishwashers ____	
Dryers ____ Compactors ____	
Fans ____ Others (denote) ____	
TOTAL ____	
MISCELLANEOUS: (number of)	
Branch Panels ____	
Transformers ____	
Air Conditioners Central Unit ____	
Separate Units (windows) ____	
Signs 20 sq. ft. and under ____	
Over 20 sq. ft. ____	
Swimming Pools Above Ground ____	
In Ground ____	
Fire/Burglar Alarms Residential ____	
Commercial ____	
Heavy Duty Outlets, 220 Volt (such as welders) 30 amps and under ____	
over 30 amps ____	
Circus, Fairs, etc. ____	
Alterations to wires ____	
Repairs after fire ____	
Emergency Lights, battery ____	
Emergency Generators ____	
INSTALLATION FEE DUE:	
FOR ADDITIONAL WORK NOT ON ORIGINAL PERMIT ..... DOUBLE FEE DUE:	
FOR REMOVAL OF A "STOP ORDER" (304-16.b)	
TOTAL AMOUNT DUE:	33.40

INSPECTION:

Will be ready on ____, 19__; or Will Call XXX 874-8300 X8700

CONTRACTOR'S NAME: Marc's Electrical Service

ADDRESS: 527 Blackstrap Rd Falmouth 04105

TEL.: 797-7722

MASTER LICENSE NO.: 6207

LIMITED LICENSE NO.: ____

SIGNATURE OF CONTRACTOR: Marc Gagne

ORG- 12-5-90

INSPECTOR'S COPY — WHITE

OFFICE COPY — CANARY

CONTRACTOR'S COPY — GREEN

INSPECTIONS: Service 12-15-92 by SB

Service called in 1:15 PM

Closing-in _____ by _____

PROGRESS INSPECTIONS: _____ / _____ / _____

_____ / _____ / _____

_____ / _____ / _____

_____ / _____ / _____

_____ / _____ / _____

_____ / _____ / _____

ELECTRICAL INSTALLATIONS

Permit Number: 2367

Location: 3 Clawson

Owner: Dennis Reeves

Date of Permit: 11-30-92

Final Inspection: 12-15-92

By Inspector: [illegible]

Permit Application Register No. 1367

DATE:	REMARKS:

912751

Permit # _____ City of Portland BUILDING PERMIT APPLICATION Fee $25 Zone _____ Map # _____ Lot # _____

Please fill out any part which applies to job. Proper plans must accompany form.

Owner: Hugo S. Maestre Phone # 892-4565

Address: 1080 Mo 743; No. Windham, ME 04062

LOCATION OF CONSTRUCTION 18-20 Colonial Rd.

Owner/Petty Contractor: Harry Haescher Sub.: 772-7494

Address: 20 Colonial Rd; Pld, ME Phone # 04102

Est. Construction Cost: $3950 Proposed Use: 2-fam & shed

Past Use: _____

# of Existing Res. Units _____ # of New Res. Units _____

Building Dimensions L _____ W _____ Total Sq. Ft. _____

Stories: _____ # Bedrooms _____ Lot Size: _____

If Proposed Use: Seasonal _____ Condominium _____ Conversion _____

Explain Conversion Demolish garage & Construct shed - 6'x1'

For Official Use Only

Date 6/27/91 Subdivision: _____

Inside Fire Limits _____

Bldg Code _____ Ownership _____

Time Limit _____

Estimated Cost _____

PERMIT ISSUED
No. JUN 25 1991
CITY OF PORTLAND

Zoning: _____

Street Frontage Provided: _____

Provided Setbacks: Front _____ Back _____ Side _____ Side _____

Review Required:

Zoning Board Approval: Yes ____ No ____ Date: _____

Planning Board Approval: Yes ____ No ____ Date: _____

Conditional Use: _____ Variance _____ Site Plan _____ Subdivision _____

Shoreland Zoning Yes ____ No ____ Floodplain Yes ____ No ____

Special Exception _____

Other (Explain) _____ 7-24-91

HISTORIC PRESERVATION

Not in District or Landmark

Does not require review

Requires Review

Action: Approved

Approved with Conditions

Denied

Date _____

Signature _____

Foundations:

1. Type of Soil: _____
2. Set Backs - Front _____ Rear _____ Side(s) _____
3. Footings Size: _____
4. Foundation Size: _____
5. Other _____

Floor:

1. Sills Size: _____ Sills must be anchored.
2. Girder Size: _____
3. Lally Column Spacing: _____ Size: _____
4. Joists Size: _____ Spacing 16" O.C
5. Bridging Type: _____ Size. _____
6. Floor Sheathing Type: _____ Size: _____
7. Other Material: _____

Exterior Walls:

1. Studding Size _____ Spacing _____
2. No. windows _____
3. No. Doors _____
4. Header Sizes _____ Span(s) _____
5. Bracing: Yes _____ No. _____
6. Corner Posts Size _____
7. Insulation Type _____ Size _____
8. Sheathing Type _____ Size _____
9. Siding Type _____ Weather Exposure _____
10. Masonry Materials _____
11. Metal Materials _____

Interior Walls:

1. Studding Size _____ Spacing _____
2. Header Sizes _____ Span(s) _____
3. Wall Covering Type _____
4. Fire Wall if required _____
5. Other Materials _____

Ceiling:

1. Ceiling Joists Size: _____
2. Ceiling Strapping Size _____ Spacing _____
3. Type Ceilings: _____
4. Insulation Type _____ Size _____
5. Ceiling Height: _____

Roof:

1. Truss or Rafter Size _____ Span _____
2. Sheathing Type _____ Size _____
3. Roof Covering Type _____

Chimneys:

Type: _____ Number of Fire Places _____

Heating:

Type of Heat: _____

Electrical:

Service Entrance Size: _____ Smoke Detector Required Yes ____ No ____

Plumbing:

1. Approval of soil test if required Yes _____ No _____
2. No. of Tubs or Showers _____
3. No. of Flushes _____
4. No. of Lavatories _____
5. No. of Other Fixtures _____

Swimming Pools:

1. Type _____
2. Pool Size _____ x _____ Square Footage _____
3. Must conform to National Electrical Code and State Law.

Permit Received By Louise E. Chase

Signature of Applicant Harry L. Haescher Date 6-19-91

PERMIT ISSUED WITH REQUIREMENTS

Signature of Owner Harry Haescher

Inspection Dates _____

White-Tax Assesor Yellow-GPCOG White Tag-CEO

MA Carroll

PLOT PLAN

N

Done w/out Insp.

FEES (Breakdown From Front)

Base Fee $ 25 —
Subdivision Fee $
Site Plan Review Fee $
Other Fees $
(Explain)
Late Fee $

Inspection Record

Type	Date
	/ /
	/ /
	/ /
	/ /
	/ /
	/ /

COMMENTS

Signature of Applicant Mary L. Moeschen Date

Demolition of Buildings Permit

PERMIT ISSUED
WITH REQUIREMENTS

(a) No building served by a building drainage system, sanitary or storm sewer, or both, which is connected to the public sewers or to a private sewer system connected to the public sewers, may be demolished prior to the termination of the building and/or facility sewer or drain at the city sewer under the inspection of the public works authority. The building sewer shall be terminated at the main, at the point designated by the public works authority.

(b) Notice of intent to demolish a building shall be given to the public works authority, by means of a copy of the application for a demolition permit from the building authority or by direct notice to the public works authority, in advance of the time when the building drain is to be terminated. No such demolition permit shall be issued until a drain termination permit has been issued by the public works authority and a copy thereof has been given to the building authority.

(c) The fee to terminate the building and/or facility sewer and/or drain system will be paid to the city in advance of the termination. The fee of two hundred fifty dollars ($250.00) per termination represents inspection fees and materials to terminate sewer service. Upon payment of this fee and approval by the public works authority, the applicant shall be issued a sewer termination permit.

(d) Failure to give notice of intent to demolish a building to the public works authority, or to terminate the building drain prior to demolition thereof, or to obtain a permit therefor, shall be deemed a violation of this section, with each day in which the violation continues deemed to be a separate violation.

(e) All excavation for sewer service termination shall be made and maintained in compliance with all provisions of the construction safety rules and regulations of chapter 25, article VII of this Code.

Removal and disposal of demolition debris: Before a permit either to demolish or remove a structure or a part thereof or to remove or dispose of existing demolition debris, as defined herein, is issued, the applicant will satisfy the building official that:

1. All such debris will be removed from the island and transported to the mainland for disposal prior to the expiration of the permit;

2. The debris will be removed to a duly licensed disposal facility; and

3. The disposal of the debris at such facility will be in accordance with all applicable federal and state rules, statutes and regulations relating to the transportation and disposition of such material.

Demolition debris: Demolition debris includes, but is not limited to, materials which are created by site preparation, clearing land or erection of a structure. It also includes, but is not limited to, brush, tree limbs, stumpage; and building materials and the waste products of building activity, such as: clay, brick, masonry, concrete, plaster, glass, wood and wood products, asphalt, rubber, metal; and plumbing, electrical and heating fixtures, appurtenances thereto and parts thereof.

No demolition debris shall either be disposed of or stored on any of the islands.

18-20 Colonial Road
Portland, Maine 04102

Agnes S. Racine, Owner

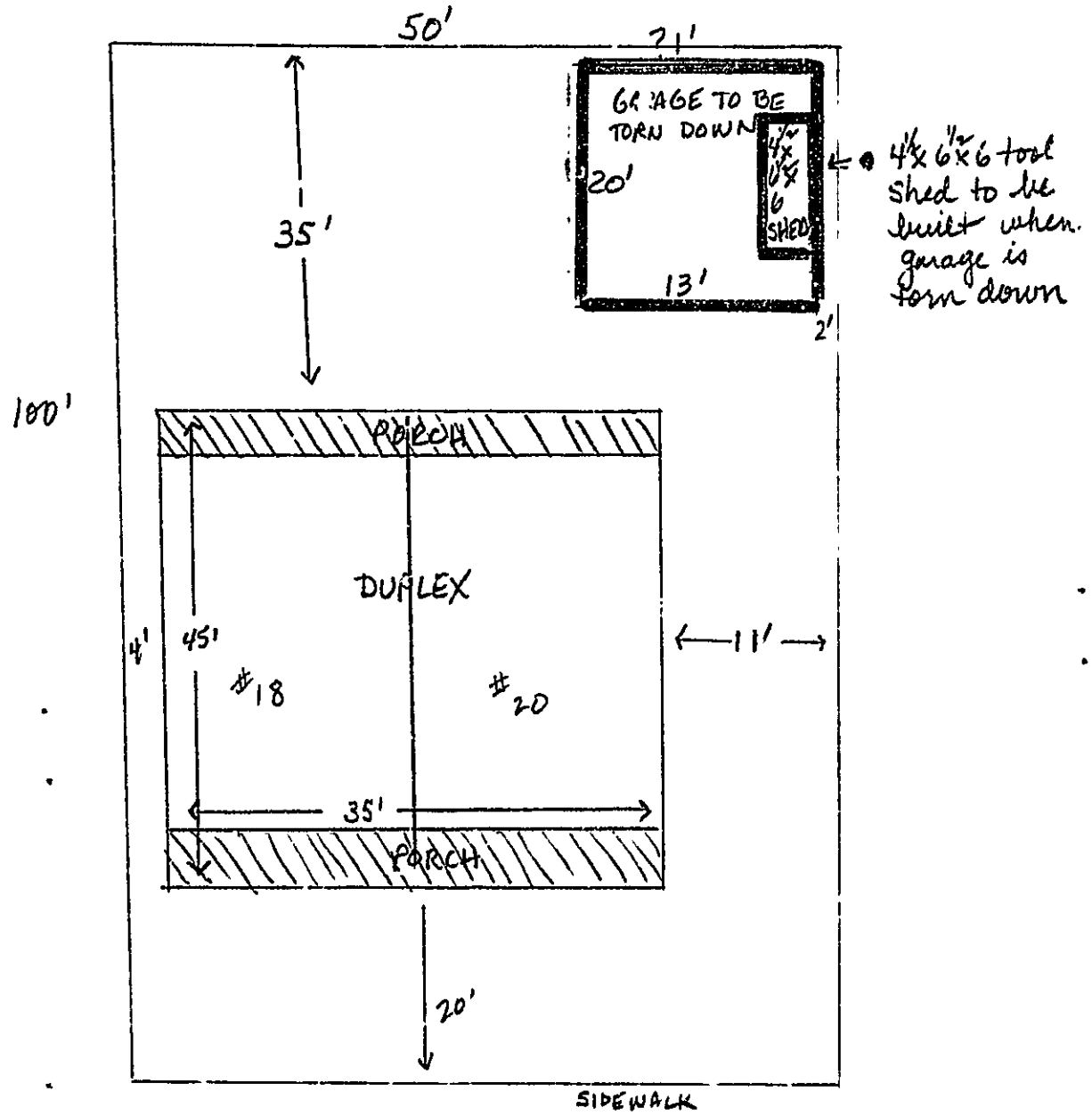

Tool Shed to be built

18-20 Colonial Road
Portland, ME 04102

Agnes S. Racine, Owner

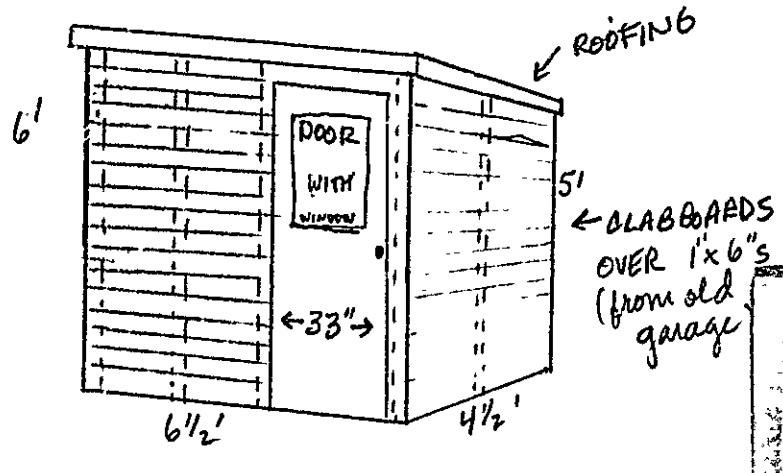

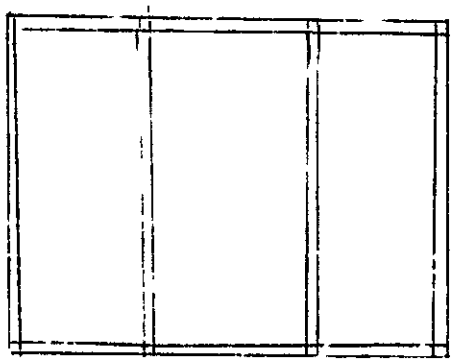

Frame out with 2x4's on 24" centers

Floor of 3/4" pressed board over cinder block foundation

Materials recycled from torn down garage.