- 64-E-14 - SEASHORE AVE. - PEAKS ISLAND -

APPLICATION FOR PERMIT

DEPARTMENT OF BUILDING INSPECTIONS SERVICES

ELECTRICAL INSTALLATIONS

Date May 6, 1982
Receipt and Permit number A77682

To the CHIEF ELECTRICAL INSPECTOR, *Portland, Maine:*

The undersigned hereby applies for a permit to make electrical installations in accordance with the laws of Maine the Portland Electrical Ordinance, the National Electrical Code and the following specifications:

LOCATION OF WORK: 84-E-14 Island Avenue, Peaks Island

OWNER'S NAME: Elliot Barowitz Same ADDRESS: same

	FEES
OUTLETS: Receptacles _____ Switches _____ Plugmold _____ ft. TOTAL _____	
FIXTURES: (number of) Incandescent _____ Flourescent _____ (not strip) TOTAL _____	
Strip Flourescent _____ ft.	
SERVICES: Overhead _x_ Underground _____ Temporary _____ TOTAL amperes 200	3.00
METERS: (number of) 1	.50
MOTORS: (number of) Fractional _____	
1 HP or over _____	
RESIDENTIAL HEATING: Oil or Gas (number of units) _____	
Electric (number of rooms) _____	
COMMERCIAL OR INDUSTRIAL HEATING: Oil or Gas (by a main boiler) _____	
Oil or Gas (by separate units) _____	
Electric Under 20 kws _____ Over 20 kws _____	

APPLIANCES: (number of)

Ranges		Water Heaters	
Cook Tops		Disposals	
Wall Ovens		Dishwashers	
Dryers		Compactors	
Fans		Others (denote)	

TOTAL _____

MISCELLANEOUS: (number of)

Branch Panels _____	
Transformers _____	
Air Conditioners Central Unit _____	
Separate Units (windows) _____	
Signs 20 sq. ft. and under _____	
Over 20 sq. ft. _____	
Swimming Pools Above Ground _____	
In Ground _____	
Fire/Burglar Alarms Residential _____	
Commercial _____	
Heavy Duty Outlets, 220 Volt (such as welders) 30 amps and under _____	
over 30 amps _____	
Circus, Fairs, etc. _____	
Alterations to wires _____	
Repairs after fire _____	
Emergency Lights, battery _____	
Emergency Generators _____	
INSTALLATION FEE DUE:	
FOR ADDITIONAL WORK NOT ON ORIGINAL PERMIT ..... DOUBLE FEE DUE:	
FOR REMOVAL OF A "STOP ORDER" (304-16.b)	
TOTAL AMOUNT DUE:	3.50

INSPECTION:

Will be ready on _____, 19__; or Will Call _x_

CONTRACTOR'S NAME: Frank Herbert

ADDRESS: Pettingill Pond, No. Windham

TEL.: _____

MASTER LICENSE NO.: 2576 SIGNATURE OF CONTRACTOR: Jack Hayes

LIMITED LICENSE NO.: _____

INSPECTOR'S COPY — WHITE

OFFICE COPY — CANARY

CONTRACTOR'S COPY — GREEN

ELECTRICAL INSTALLATIONS—

Permit Number 77682

Location 84-E-14 Island Ave Fields Land

Owner E. Barovitz

Date of Permit May 6-82

Final Inspection 5-20-82

By Inspector Libby

Permit Application Register Page No. 112

Peters Island

INSPECTIONS: Service ✓ by Libby

Service called in 5-20-82

Closing-in _____ by _____

PROGRESS INSPECTIONS _____ / _____ / _____

_____ / _____ / _____

_____ / _____ / _____

_____ / _____ / _____

_____ / _____ / _____

_____ / _____ / _____

CODE COMPLIANCE COMPLETED

DATE 5-20-82

DATE:	REMARKS.

REPLACMENT VARIANCE FORM—FOR THE TOWN/CITY OF Portland*Peaks Island

THE PURPOSE OF THIS AGREEMENT IS TO ASSIST INDIVIDUALS IN REPLACING EXISTING SUBSURFACE WASTEWATER SYSTEMS OR CORRECTING EXISTING DIRECT OVERBOARD DISCHARGE SYSTEMS

TOWN/CITY CODE: 05100 | LPI NUMBER: 123 | DATE PERMIT ISSUED (MONTH/DAY/YEAR): 6/8/79 | EVALUATOR NUMBER: 3 | PERMIT NUMBER: 215526 ER

ADDRESS OF SYSTEM'S LOCATION: 84-E-14 (Portland Assessors) ST/LOT NUMBER — Seashore Ave. STREET, ROAD/SUBDIVISION — Peaks Island ZIP CODE 04108

NAME OF OWNER: Elliott & Jane Barowitk jt.

Owner Proposes	1. Repair 2. Expand 3. Replace Malfunction 4. Replace Overboard Discharge	CODE: 4
	1. Seasonal 2. Year Round. Date old system was installed: 1910± Soils Category: 2B	1
	Size of lot in square footage	3312 SQ. FT.
Section 4.4 Soils	1. Bedrock 2. Impervious Layer. If (1.) is coded, nothing closer than 10 inches is to be allowed. If (2.) is coded, nothing closer than 6 inches is to be allowed. NOT APPLICABLE	CODE: IN:
Section 4.7 Distances Disposal Area From	1. Waterbody [A. Tidal Water B. Swamp C Bog D Marsh E Lake F Pond G. River H. Stream I. Similar Watercourse]	CODE #: 1 LET.: A FEET: 73
	2. Owner's Well 4. Intermittent Waterbody 6 Slope >33 1/3% 3 Building 5. Property Line 7. Drainage Ditch. If (1. and/or 2.) is coded, nothing closer than 60 feet is to be allowed. If (3.) is coded, nothing closer than 15 feet in the case of a full basement and 10 feet in the case of a slab is to be allowed. If (4.) is coded, nothing closer than 25 feet is to be allowed If (5.) is coded, nothing closer than 5 feet is to be allowed. If (6.) is coded, nothing closer than 25 feet is to be allowed. If (7.) is coded, nothing closer than 10 feet is to be allowed NOT APPLICABLE	CODE / FEET
Sec. 4.7 Distances —Septic Tank From	1. Owner's Well NOT APPLICABLE If (1.) is coded, nothing closer than 50 feet is to be allowed	CODE: FEET:
Section 7.6 Holding Tank for Seasonal Dwellings	1. Requesting permission to install a 1500 gallon holding tank. NOT APPLICABLE Holding tanks shall have float alarms. Flow reducing valves for showers and sinks and low volume toilets must also be installed	CODE:
Section 9.3 System Size	1. Reduction in size of disposal area NOT APPLICABLE Nothing more than a 25% reduction is to be allowed, provided flow reducing valves for showers and sinks, and low volume toilets are used. No reduction is allowed for "small" systems.	CODE: SQUARE FEET:
Section 9.3 (b) Fill Extension	1. Increase of the 4:1 slope extension to 3:1 NOT APPLICABLE	CODE:
Section 9.3 (c) Bed Width	1. Bed Width NOT APPLICABLE If (1.) is coded nothing greater than 30 feet is to be allowed and no increase in bed width is allowed for original ground slopes in excess of 8 per cent.	CODE: FEET:

STATE OFFICE USE ONLY

HHE-204 RV778

STATEMENTS

STATEMENT OF OWNER

I, _____, the undersigned, am the owner of the property indicated in the application and state that the property is not for sale in the foreseeable future. I understand that the installation explained above and illustrated on the HHE-200 FORM accompanying this request is not in total compliance with the Maine State Plumbing Code. This system is to replace an existing direct discharge or subsurface wastewater disposal system. Should the proposed replacement system malfunction or create any nuisance or environmental problems or affect my water supply, I release all concerned with this waiver provided they have performed their duties in a reasonable and proper manner. Further, should a malfunction occur, I will take every step possible to correct it.

X Elliott Barnard 5/11/79
Signature of Owner Date

STATEMENT OF SOIL EVALUATOR

I, William B. Goodwin, the undersigned certify that the information I have submitted on the HHE-200 FORM accurately represents the conditions that exist on the applicant's property. A waiver to the Maine State Plumbing Code is necessary since no system can be installed which will completely satisfy all Code provisions.

Evaluator #3

X William B Goodwin April 12, 197
Signature of Soil Evaluator Date

Municipality's Findings

The proposed system (does) (does not) conflict with any municipal or shoreland zoning ordinances, and has been shown to the Code enforcement Officer.

CONCLUSIONS

I, _____, the undersigned, have visited the above property and find that it is not possible to conform to certain provisions of the Plumbing Code. The waiver request submitted by the applicant is the best alternative for a replacement subsurface wastewater disposal system on this property.

Based upon my conclusions, I permit the installation of the sewage disposal system as proposed and shown on the HHE-200 FORM.

Signature of Local Plumbing Inspector 6/7/79
Date

WAIVER CONDITIONS

A. APPLICABILITY. These variances relate to existing single family dwellings only. Any variances requested on the reverse side of this application must maintain as near as possible the requirements of the Part II, Plumbing Code on "Subsurface Wastewater Disposal Regulations". For example, if a disposal area can be 90 feet from the owner's well then the 90 feet is to be allowed; not the bare minimum of 50 feet. If the restriction is such that it is less than the requirements here given, then a state variance is required. Any variance or waiver requests not covered in this agreement involving other types of structures or other conditions require submission to the Division for review. All local ordinances must be complied with.

B. SOIL EVALUATOR'S RESPONSIBILITIES. The property shall be visited by a qualified soil evaluator who shall investigate the site and complete the HHE-200 FORM recommending a wastewater disposal system which can best conform with the requirements of the Code. The investigator shall inform his client that a waiver is required and indicate so on the HHE-200 FORM. He should then refer his client to the local Plumbing Inspector.

C. LOCAL PLUMBING INSPECTOR'S RESPONSIBILITIES. The Local Plumbing Inspector shall review the soil evaluation HHE-200 FORM and complete the waiver request form attached. Once it is determined that the waiver request is the most practical approach to correcting the applicant's problem, the Local Plumbing Inspector shall see that the statement portions of the waiver form are completed by the homeowner and the soil evaluator before giving final approval.

D RECORDS A copy of the waiver request forms and the associated HHE-200 FORMS shall be provided to the homeowner, the soil evaluator, the L.P.I. for the municipal files, and other copies determined to be necessary, with the original copy forwarded to the Division with a copy of the plumbing permit.

E. LOG OF WAIVERS ISSUED The plumbing inspector shall maintain a chronological log of all waivers granted. The total of the waivers granted for each calendar year shall be noted in the annual report which is submitted to the town and to the Division.

F. SECTION OF THE CODE WHICH CAN BE WAIVED. The authority of issuing waivers at the municipal level is restricted to those sections specifically identified on the check-off portion of the waiver request form.

G. RESCINDING OF WAIVER RIGHTS If the Division, in its review of these waivers, finds that a local plumbing inspector or soil evaluator exceeds the limits and limitations spelled out in this agreement, the Division will remove this privilege from that individual.

H HOLDING TANKS. The Local Plumbing Inspector is authorized to permit the use of holding tanks in replacement situations (not to include privies) where this is the most practical alternative to serve an EXISTING SEASONAL, SINGLE FAMILY DWELLING. A minimum of 1500 gallon holding tank, along with associated alarms, may be permitted by the local plumbing inspector.

Original to be sent to Division of Health Engineering, Augusta, Maine 04333 by the LPI

This Application Is For: ☒ New System ☐ Expanded System ☐ Conversion Permit ☐ Experimental System ☒ Replacement Of Entire System ☐ Disposal Area Only

An Application For Subsurface Wastewater Disposal Permit

This Is NOT A Permit; This Form When Completed Must Be Presented To The Local Plumbing Inspector To Obtain A Permit

Location Of Property: Portland--Peaks Island	Street, Road, Etc.: Seashore Ave. If On Water Body, Give Name: Ocean	Plumbing Permit No.: 25526	Date Of Plumbing Permit: 6/8/79
Owner: Elliott Barowitz	Tel. No.	Name Of Applicant Owner's Agent	Tel. No.
Owner's Street: 7 Washington Place		Street	
Owner's Town: New York	State: N.Y. Zip Code: 10003	Town	State / Zip Code
Owner's Signature: X Elliott Barowitz	Date: 5/11/79	Applicant's Signature: [signature]	Date: 6/8/79
Size Of Lot: 3312 ☒ Sq. Feet ☐ Acres	Is Lot Zoned? ☒ Yes ☐ No	Type Of Zoning: Res.	Subdivision Name: Portland Assessors Plan Lot No.: 84-E-14

The Water Supply For This Property Is: ☐ Dug Well, depth _____; ☐ Drilled Well, depth _____; ☐ Spring, depth _____; Surface water ☐ Body ☐ Course—☐ with disinfection, ☐ without disinfection; Public Utility, name: Portland Water District

SITE INVESTIGATION

Show Location Of Pits on Site Plan on Page 2

Thickness and type (plus or minus) of each soil strata encountered. Depth from bottom of organic horizon to:

	Soil Profile No. 1 ☒ Pit ☐ Boring	Soil Profile No. ☐ Pit ☐ Boring	Soil Profile No. ☐ Pit ☐ Boring	Soil Profile No. ☐ Pit ☐ Boring
Organic Strata	3" Sod			
1st Strata	Lt. Yellow Brown Sand, 4"	1st Strata, Inches	1st Strata, Inches	1st Strata, Inches
2nd Strata	Dk. Brown Sandy Loam, 16"	2nd Strata, Inches	2nd Strata, Inches	2nd Strata, Inches
3rd Strata	Dk. Brown [illegible]ry Rocky Loam, 18"	3rd Strata, Inches	3rd Strata, Inches	3rd Strata, Inches
4th Strata	Dk. Red Brown Rocky Loam, 17"	4th Strata, Inches	4th Strata, Inches	4th Strata, Inches
Total Depth of Observation Hole	Inches 55"	Total Depth of Observation Hole Inches	Total Depth of Observation Hole Inches	Total Depth of Observation Hole Inches
Max. Seasonal Water Table Mottling	☒ None Evident; Inches	Max. Seasonal Water Table Mottling ☐ None Evident; Inches	Max. Seasonal Water Table Mottling ☐ None Evident; Inches	Max. Seasonal Water Table Mottling ☐ None Evident; Inches
Impervious Layer Clay, Etc.	☒ None Evident; Inches	Impervious Layer Clay, Etc. ☐ None Evident; Inches	Impervious Layer Clay, Etc. ☐ None Evident; Inches	Impervious Layer Clay, Etc. ☐ None Evident; Inches
Bedrock	☐ None Evident; 55" Inches; Type of Bedrock: Schuitose	Bedrock ☐ None Evident; Inches; Type of Bedrock	Bedrock ☐ None Evident; Inches; Type of Bedrock	Bedrock ☐ None Evident; Inches; Type of Bedrock
Surface Slope	2.5 %	Surface Slope %	Surface Slope %	Surface Slope %
Soil Group / Soil Condition	2 / B	Soil Group / Soil Condition	Soil Group / Soil Condition	Soil Group / Soil Condition
	Per Table 9-1 Code II	Per Table 9-1 Code II	Per Table 9-1 Code II	Per Table 9-1 Code II

On 10/20/78 (date), a site investigation for this project was completed. I conducted this soil evaluation and certify that the results indicated above best represent the soil conditions found. I recommend the following type and size of private sewage disposal system. I also recommend the proposed private sewage disposal system layout and location shown on page 2.

Signature: William B. Goodwin — Site Evaluator License Number: 3.

Date Signed: March 26, 1979

DISPOSAL SYSTEM PROPOSED

Show Location of System and Details on Disposal Plan on Page 2

SYSTEM: ☒ Combined System ☐ Separated System. If separated system—type of human waste disposal system to be used: ☐ Sealed Vault Privy ☐ Open Pit Privy ☐ Compost Toilet ☐ Chemical Toilet ☐ Incinerator Toilet

TREATMENT TANK: ☐ Aerobic Tank ☒ Septic Tank ☒ Concrete ☐ Fiberglass ☐ Metal. Size in Gallons: 1,000 Gal.

Number of Bedrooms: 3

SUBSURFACE ABSORPTION AREA/TYPE: ☐ Bed System No. of Slots ____ Length ____ ft Width ____ ft. ☒ Chamber System Number 300 ☒ Type A ☐ Type B ☐ Single File ☒ Cluster. ☐ Special System Length ____ ft NOT APPLICABLE ____ ft. ☐ Laundry System Type A ____ No. of Lines NOT APPLICABLE. Name and type of establishment if other than private home.

SIZE: ☐ Small ☐ Medium ☐ Med.-Large ☐ Large ☐ Extra Large. Design Flow 264 GPD

SITE MODIFICATION: Fill will be: NOT APPLICABLE in. downhill

DETAILS: ☐ A Distribution Box is required. Pumping is—☐ required ☐ is not required. The dose will be ____ Gallons

DISTANCES: ☐ Yes ☐ No. The proposed subsurface absorption area will be located at least 100 feet from any and all wells, springs, surface water bodies and houses (lake, pond, ocean, brook, stream, river, swamps, marshes, and bogs.

☐ Yes ☐ No. The proposed subsurface absorption area will be located at least 300 feet from any and all wells and springs producing 2000 gallons or more of water per day and any public water supplies.

PROPERTY LOT LOCATION MAP

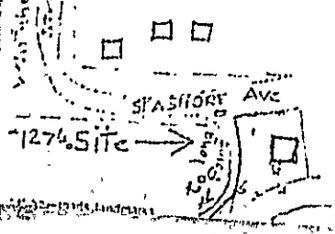

WAIVER ☐ State Variance Required ☐ Replacement Variance Required ☐ None Required

FOR THE USE OF LPI ONLY

☐ Denial. Application is denied for the following reason/s, portions of the Code II are cited. Form is incomplete (____ pg.) as to ☐ General Info., ☐ Site Investigation, ☐ System Proposed, ☐ Site Plan, ☐ Disposal System Plan, ☐ Cross-Section, ☐ Statement. See section 4.1

☐ Site Investigation indicates site is ☐ unsuitable for disposal system, ☐ unsuitable for system proposed.

☐ System Proposed does not conform to Code ____

☐ Site Investigation indicates site modifications are necessary

☒ Acceptance. Application for permit is approved ☐ with condition specified, comply with Section ____

☐ without condition

LPI _____ Date _____

APPLICATION FOR SUBSURFACE W/ [illegible]

(For systems disposing of less t[han] 2000 g[allons] [illegible]

Page 2 of 2

Town: Portland-Peaks Island | Street, Road, etc: Seashore Ave. | Owner: Elliot Barowitz

If on water body, give name: Ocean

Site Plan — Scale 1" = 20.0' ft.

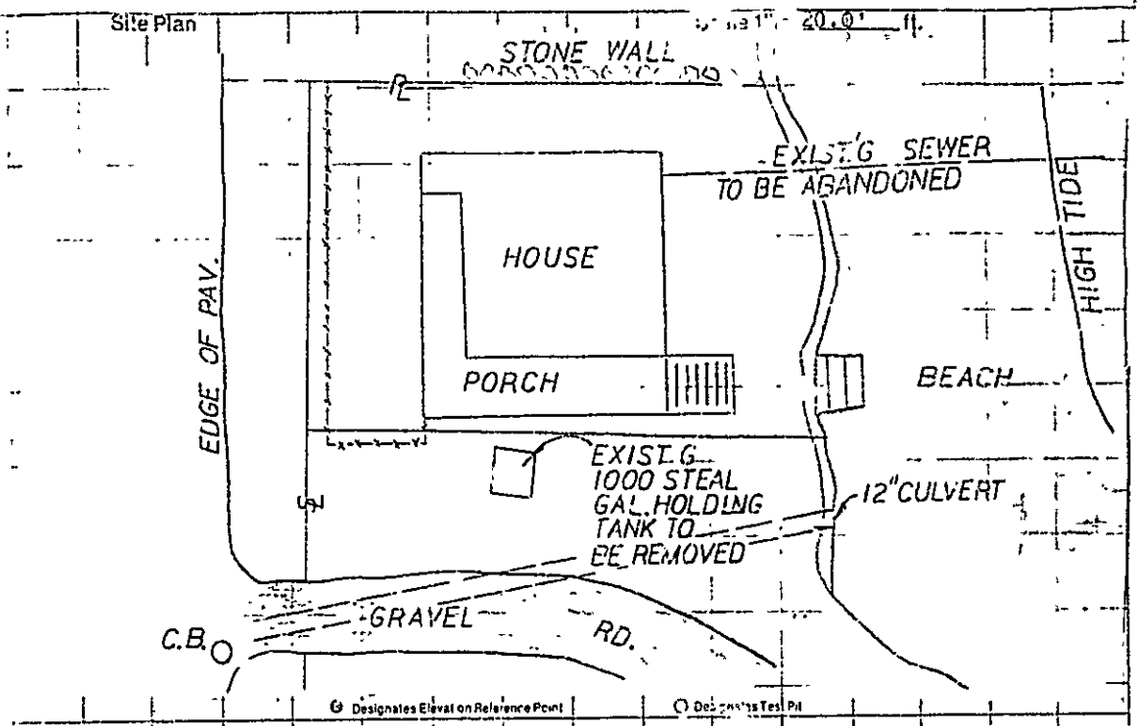

Private Sewage Disposal Plan — Scale 1" = 20' or by: WEG

H-20 CHAMBER SYSTEM, SEE SECTION 9 OF THE MAINE STATE PLUMBING CODE PART II

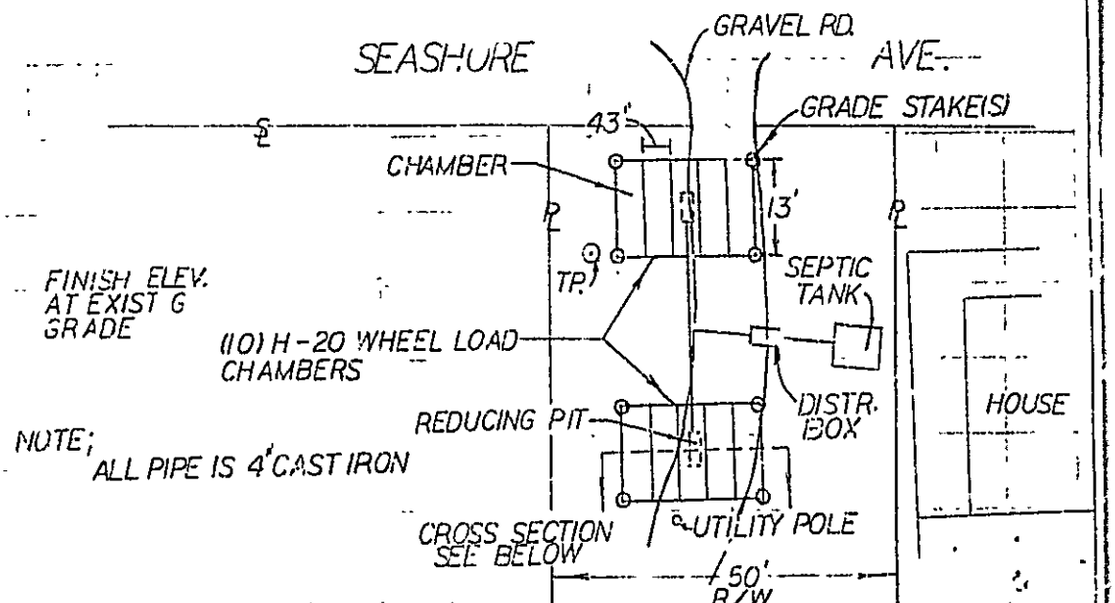

Subsurface Absorption Area Cross-section — Scale: Vertical—1" = 5' or Horizontal—1" = 20' or

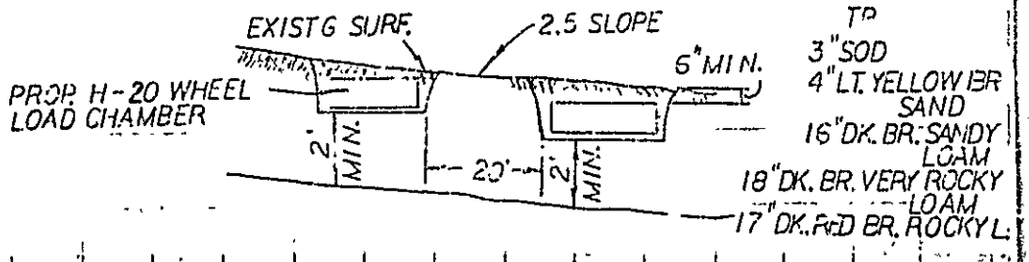

Site Evaluator's Signature: William B. Godwin Date: May 11, 1979 License Number #3

HHE-200 1/78

Signature Required

Statement: (no permit may be issued unless signed)

I certify that all the information submitted to be true and correct and I understand that issuance of a permit is based upon the information and plans submitted by the applicant. I also understand that any falsification of this application is reason to deny a permit to install a private sewage disposal system and that the permit is valid for a six (6) month period from the date of permit issuance. I understand that no guarantee is intended or implied by reason of any advice or approval given by the Administrative Authority or its agent.

Date

Applicant

Owner

912757

Permit # ____ City of Portland **BUILDING PERMIT APPLICATION** Fee $35. Zone ____ Map # ____ Lot # ____

Please fill out any part which applies to job. Proper plans must accompany form.

PERMIT ISSUED
JUN 25 1991
CITY OF PORTLAND

Owner: Elliott Barowitz Phone # 766-2873

Address: Island Ave, Peaks Island, ME 04103

LOCATION OF CONSTRUCTION Island Ave - Peaks Isl -

Contractor: Patrick Plourde Sub: 799-5943

Address: 11 Oak St, So Ptld, ME Phone # 04106

Est. Construction Cost: $3475 Proposed Use: 1-fam w int renov

Past Use: 1-fam

# of Existing Res. Units ____ # of New Res. Units ____

Building Dimensions L ____ W ____ Total Sq. Ft ____

Stories: ____ # Bedrooms ____ Lot Size: ____

Is Proposed Use: Seasonal ____ Condominium ____ Conversion ____

Explain Conversion Interior renovations

For Official Use Only

Date 6/19/91 Subdivision: Name ____ Lot ____

Inside Fire Limits ____

Bldg Code ____ Ownership: ____

Time Limit ____

Estimated Cost $3[illegible]

Zoning: IR-2 Island Residence Zone

Street Front Provided: ____

Provided Side Front ____ Back ____ Side ____ Side ____

Review Required:

Zoning Board Approval: Yes ____ No ____ Date: ____

Planning Board Approval: Yes ____ No ____ Date: ____

Conditional Use: ____ Variance ____ Site Plan ____ Subdivision ____

Shoreland Zoning Yes ____ No ____ Floodplain Yes ____ No ____

Special Exception ____

Other ____ (Explain) ____

6-25-91

84-E-14

HISTORIC PRESERVATION

Fields District not Landmark.

Does not require review.

Requires Review.

Action: Approved

Approved with Conditions

Denied

Date ____

Signature ____

Foundation:

1. Type of Soil: ____
2. Set Backs - Front ____ Rear ____ Side(s) ____
3. Footings Size: ____
4. Foundation Size: ____
5. Other ____

Floor:

1. Sills Size: ____ Sills must be anchored.
2. Girder Size: ____
3. Lally Column Spacing: ____ Size: ____
4. Joists Size: ____ Spacing 16" O.C.
5. Bridging Type: ____ Size: ____
6. Floor Sheathing Type: ____ Size: ____
7. Other Material: ____

Exterior Walls:

1. Studding Size ____ Spacing ____
2. No. windows ____
3. No. Doors ____
4. Header Sizes ____ Span(s) ____
5. Bracing: Yes ____ No. ____
6. Corner Posts Size ____
7. Insulation Type ____ Size ____
8. Sheathing Type ____ Size ____
9. Siding Type ____ Weather Exposure ____
10. Masonry Materials ____
11. Metal Materials ____

Interior Walls:

1. Studding Size ____ Spacing ____
2. Header Sizes ____ Span(s) ____
3. Wall Covering Type ____
4. Fire Wall if required ____
5. Other Materials ____

Ceiling:

1. Ceiling Joists Size ____
2. Ceiling Strapping Size ____ Spacing ____
3. Type Ceilings: ____
4. Insulation Type ____ Size ____
5. Ceiling Height ____

Roof:

1. Truss or Rafter Size ____ Span ____
2. Sheathing Type ____ Size ____
3. Roof Covering Type ____

Chimneys:

Type ____ Number of Fire Places ____

Heating:

Type Heat: ____

Electrical:

Service Entrance Size: ____ Smoke Detector Required Yes ____ No ____

Plumbing:

1. Approval of soil test if required Yes ____ No ____
2. No. of Tubs or Showers ____
3. No. of Flushes ____
4. No. of Lavatories ____
5. No. of Other Fixtures ____

Swimming Pools:

1. Type: ____
2. Pool Size: ____ Square Footage ____
3. Must conform to National Electrical Code and State Law.

Permit Received By Louise E. Chase

Signature of Applicant Patrick A. Plourde Date 6/19/91

Signature of CEO Patrick Plourde Date ____

Inspection Dates ____

White-Tax Assesor Yellow-GPCOG White Tag-CEO [7] MR. Rowe

© Copyright GPCOG 1988