CITY OF PORTLAND, MAINE

EXECUTIVE DEPARTMENT

PUBLIC BUILDINGS DIVISION

OCEAN GATEWAY TERMINAL - MOORING PLATFORM CATWALK

BID #515

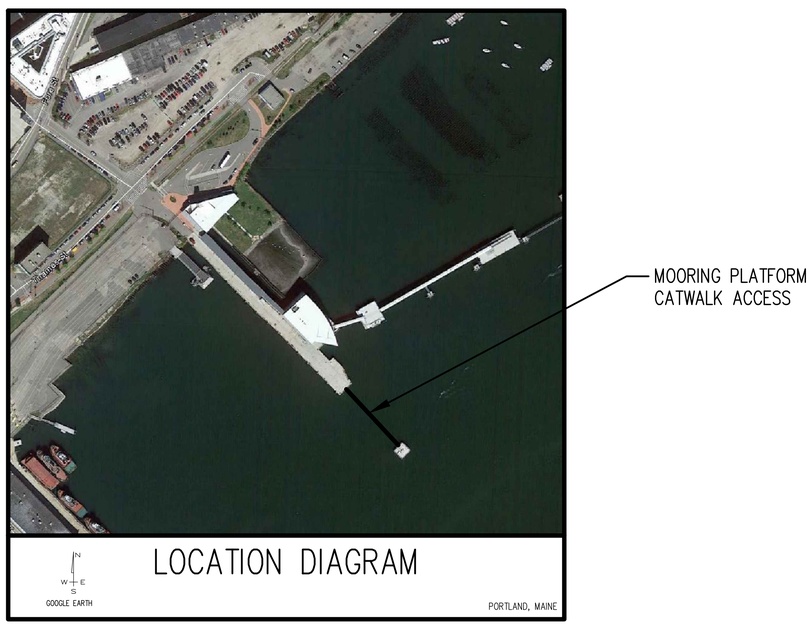

LOCATION DIAGRAM

LIST OF DRAWINGS

1. SITE PLAN
2. PLAN & ELEVATION VIEWS
3. CONCRETE CAP, PILE, & LAMP POLE DETAILS
4. STEEL PEDESTAL LANDING DETAILS

ES1.0 ELECTRICAL LIGHTING AND POWER PLAN

TEC ASSOCIATES

CONSULTING ENGINEERS

46 SAWYER STREET SOUTH PORTLAND, MAINE 04106

STATE OF MAINE
WAYNE WRIGHT
LICENSED
PROFESSIONAL ENGINEER
9/28/14

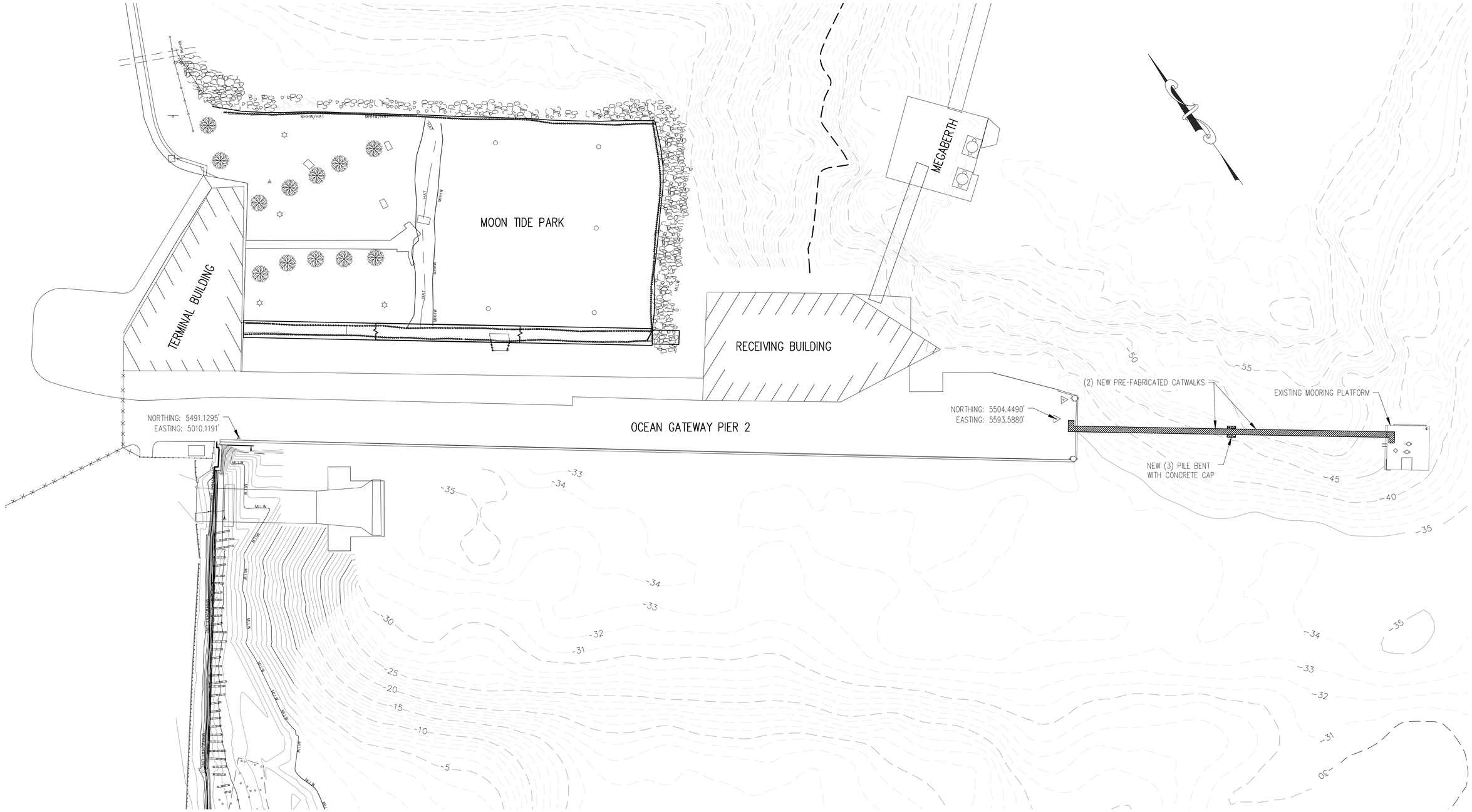

NOTES

1. HYDROGRAPHIC SURVEY BY F.M. BECK, INC. YARMOUTH, MAINE.
2. CONTOUR INTERVAL IS ONE FOOT.
3. THIS PLAN DOES NOT REPRESENT A BOUNDARY SURVEY.
4. ELEVATIONS ARE BASED ON MEAN LOWER LOW WATER (MLLW) DATUM.

30 20 10 0 15 30 60 120

(IN FEET)
1" = 30"

STATE OF MAINE
WAYNE M. WRIGHT
LICENSED
PROFESSIONAL ENGINEER
7/29/14

CITY OF PORTLAND, MAINE
PUBLIC BUILDINGS DIVISION

OCEAN GATEWAY PIER 2
MOORING PLATFORM CATWALK
SITE PLAN

TEC ASSOCIATES CONSULTING ENGINEERS
46 SAWYER STREET SOUTH PORTLAND, MAINE 04106

SCALE	1" = 30'-0"	DATE	25 JUNE 2014
JOB NUMBER	DRAWN BY	DESIGNED BY	DRAWING NO.
1301-6	NJR	NJR	1

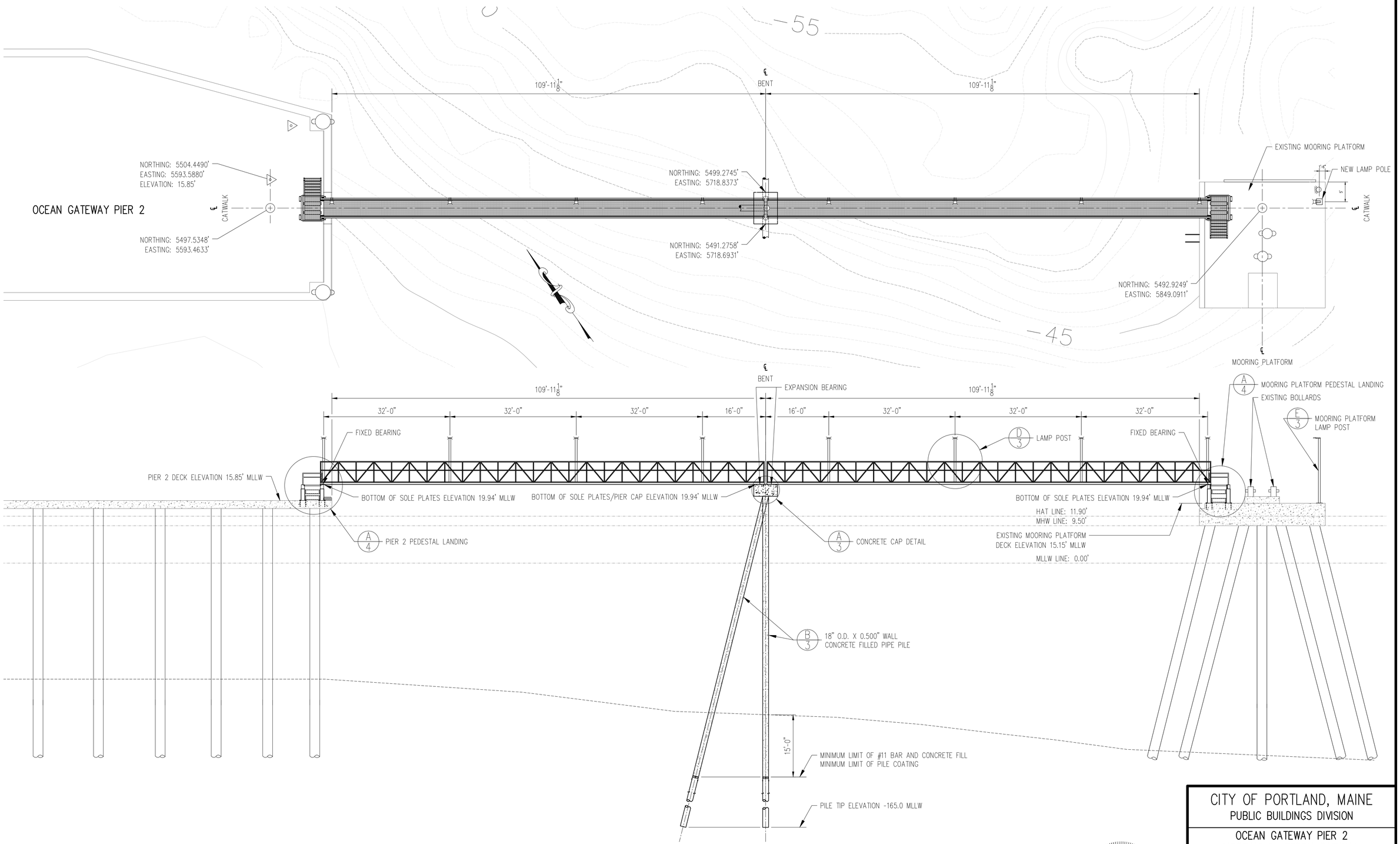

STATE OF MAINE
WAYNE WRIGHT
LICENSED
PROFESSIONAL ENGINEER
7/28/14

CITY OF PORTLAND, MAINE
PUBLIC BUILDINGS DIVISION

OCEAN GATEWAY PIER 2
MOORING PLATFORM CATWALK
PLAN & ELEVATION VIEWS

TEC ASSOCIATES CONSULTING ENGINEERS
46 SAWYER STREET SOUTH PORTLAND, MAINE 04106

SCALE	N.T.S.	DATE	25 JUNE 2014
JOB NUMBER	DRAWN BY	DESIGNED BY	DRAWING. NO.
1301-6	NJR	NJR	2

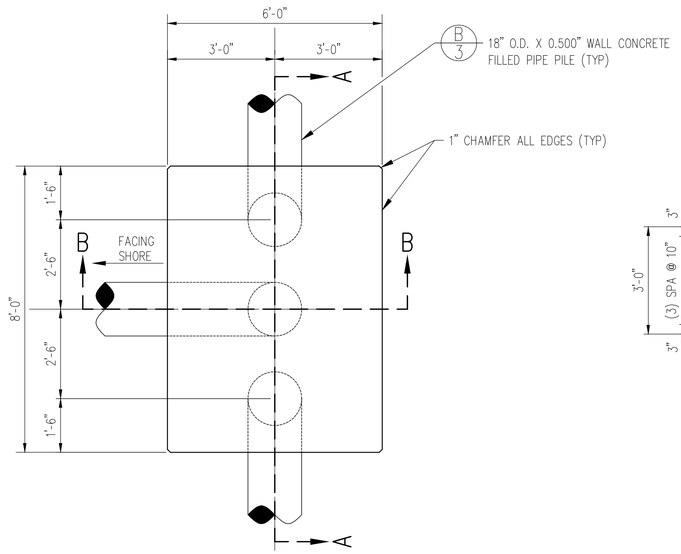

A/3 PILE CAP PLAN VIEW AT ELEVATION 16.94' MLLW
1/2" = 1'-0"

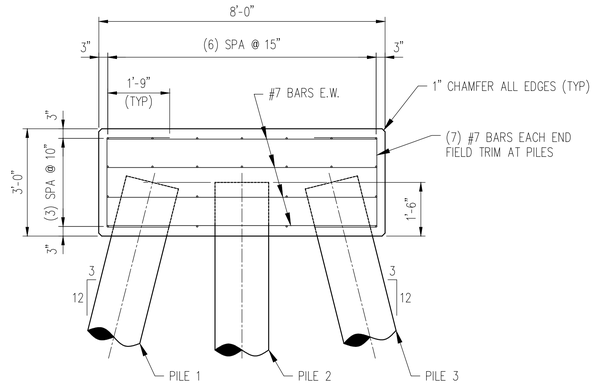

SECTION A-A
1/2" = 1'-0"

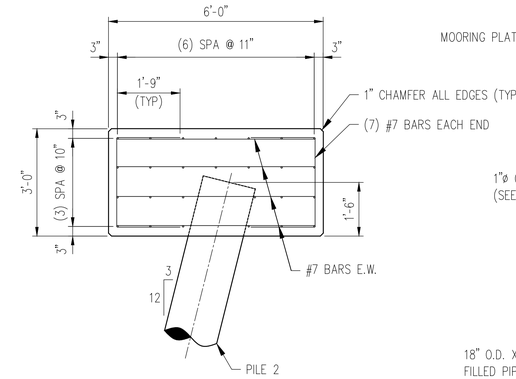

SECTION B-B
1/2" = 1'-0"

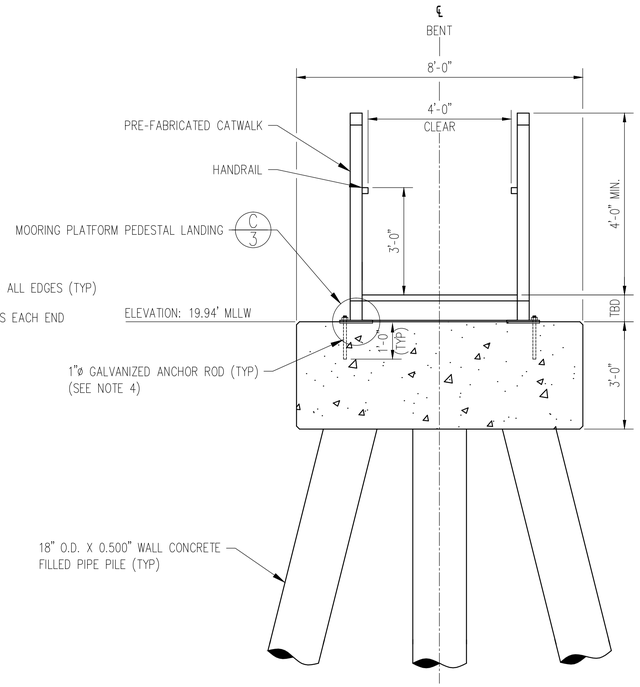

BENT CROSS SECTION
1/2" = 1'-0"

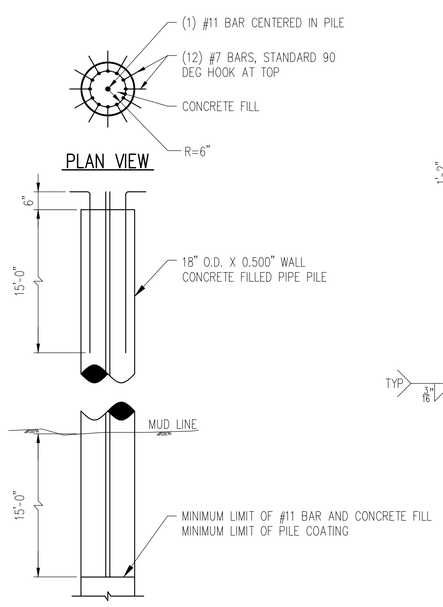

B/3 PILE DETAILS
1" = 1'-0"

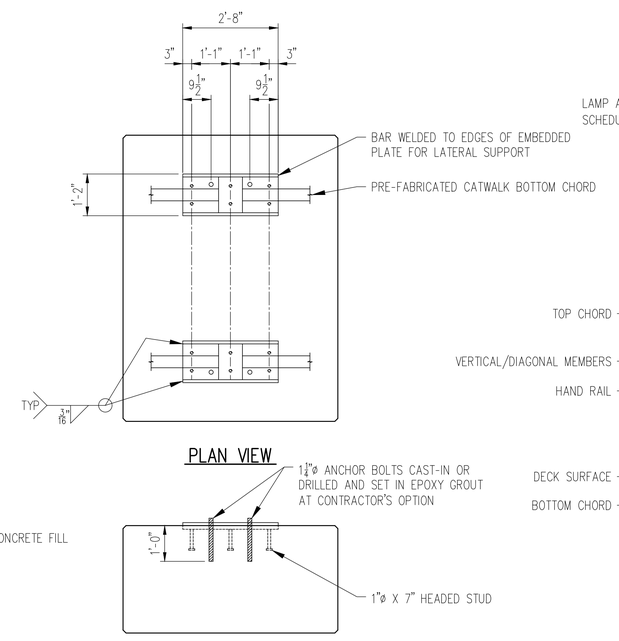

C/3 EMBEDDED BASE PLATE DETAIL
1" = 1'-0"

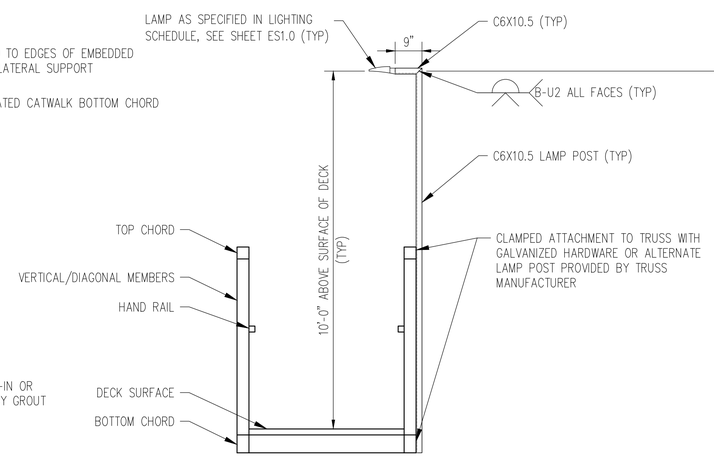

D/3 CATWALK LAMP POLE DETAIL
1/2" = 1'-0"

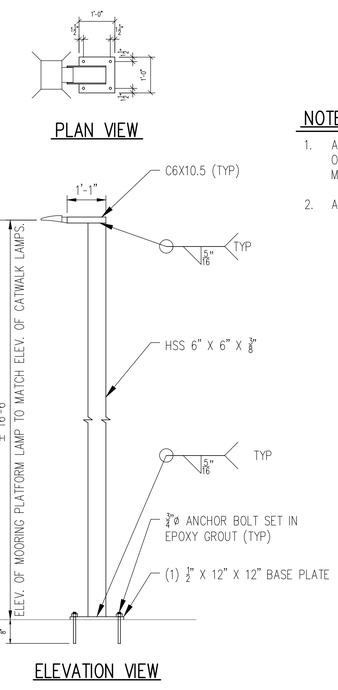

E/3 MOORING PLATFORM LAMP POLE DETAIL
1/2" = 1'-0"

NOTES

1. ALL DIMENSIONS FOR EMBEDDED BASE PLATE SUBJECT TO CHANGE BASED ON DIMENSIONS OF SOLE PLATE FURNISHED BY PREFABRICATED CATWALK MANUFACTURER.
2. ALL STEEL SHALL BE GALVANIZED.

CITY OF PORTLAND, MAINE
PUBLIC BUILDINGS DIVISION

OCEAN GATEWAY PIER 2
MOORING PLATFORM CATWALK
CONCRETE CAP, PILE, & LAMP POLE DETAILS

TEC ASSOCIATES CONSULTING ENGINEERS
46 SAWYER STREET SOUTH PORTLAND, MAINE 04106

SCALE	AS SHOWN	DATE	25 JUNE 2014
JOB NUMBER 1301-6	DRAWN BY NJR	DESIGNED BY NJR	DRAWING NO. 3

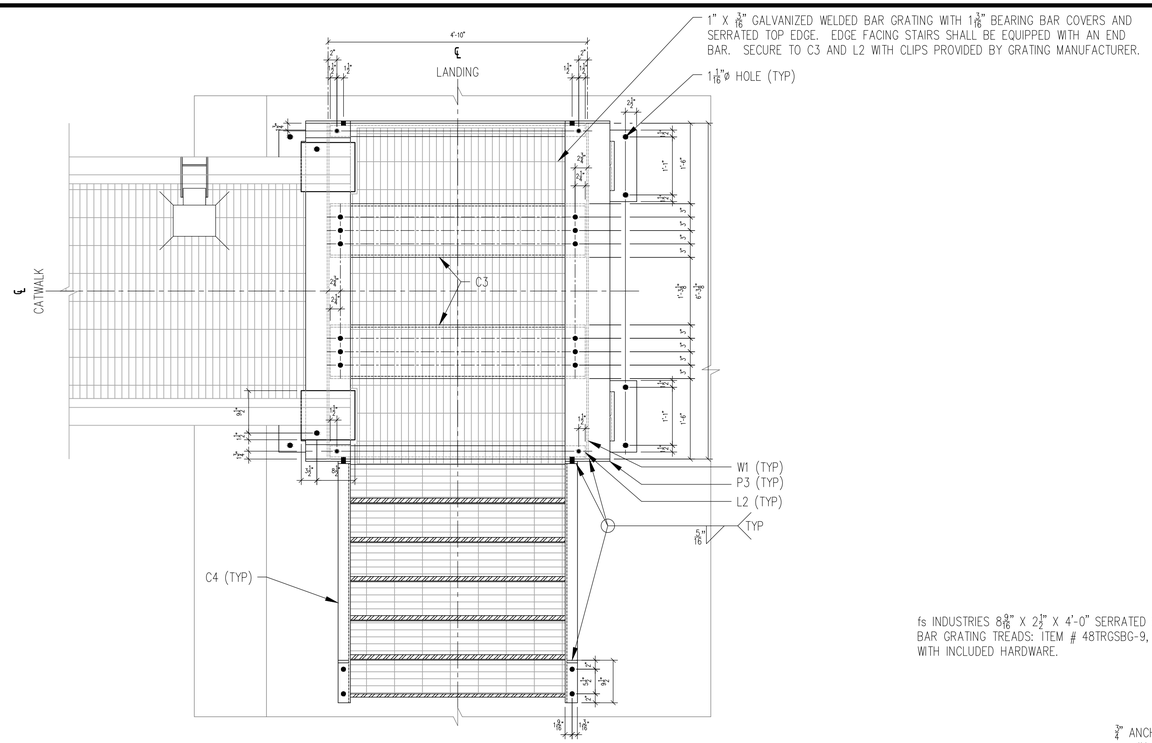

A/4 PLAN VIEW
3/4" = 1'-0"

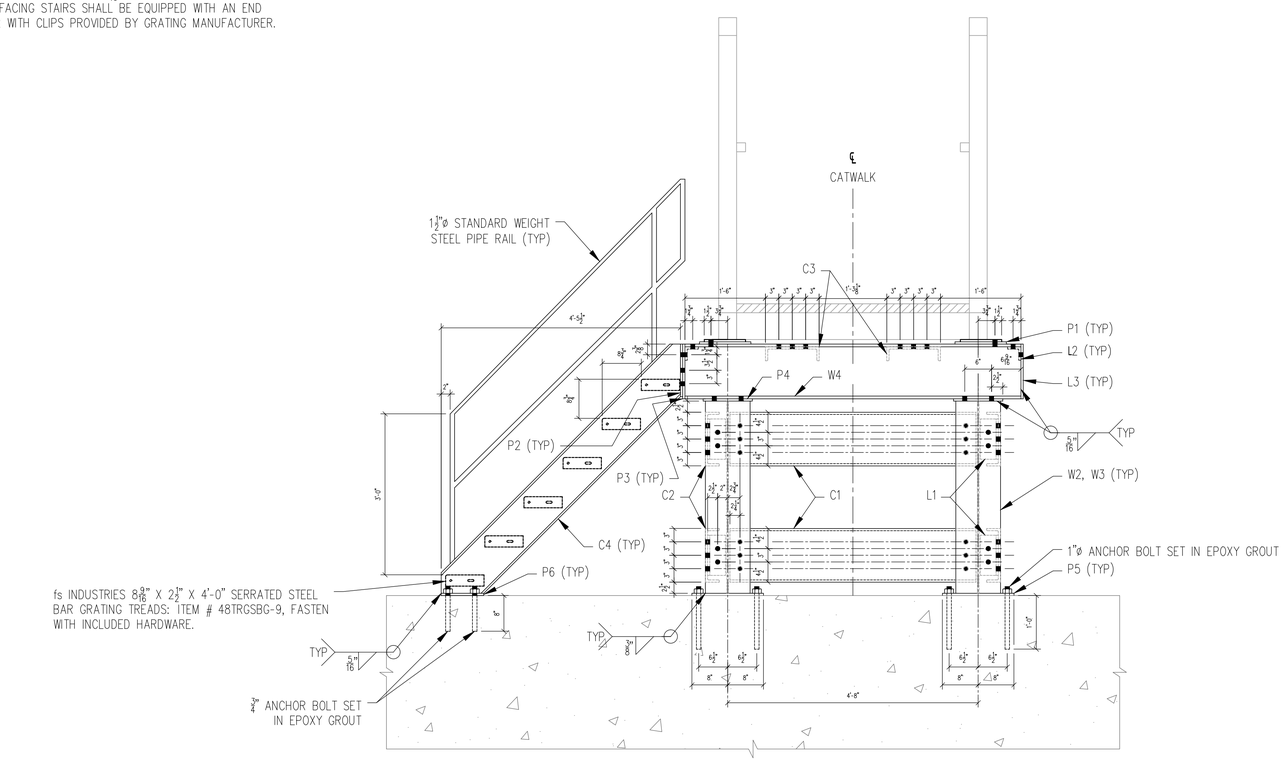

END ELEVATION VIEW
3/4" = 1'-0"

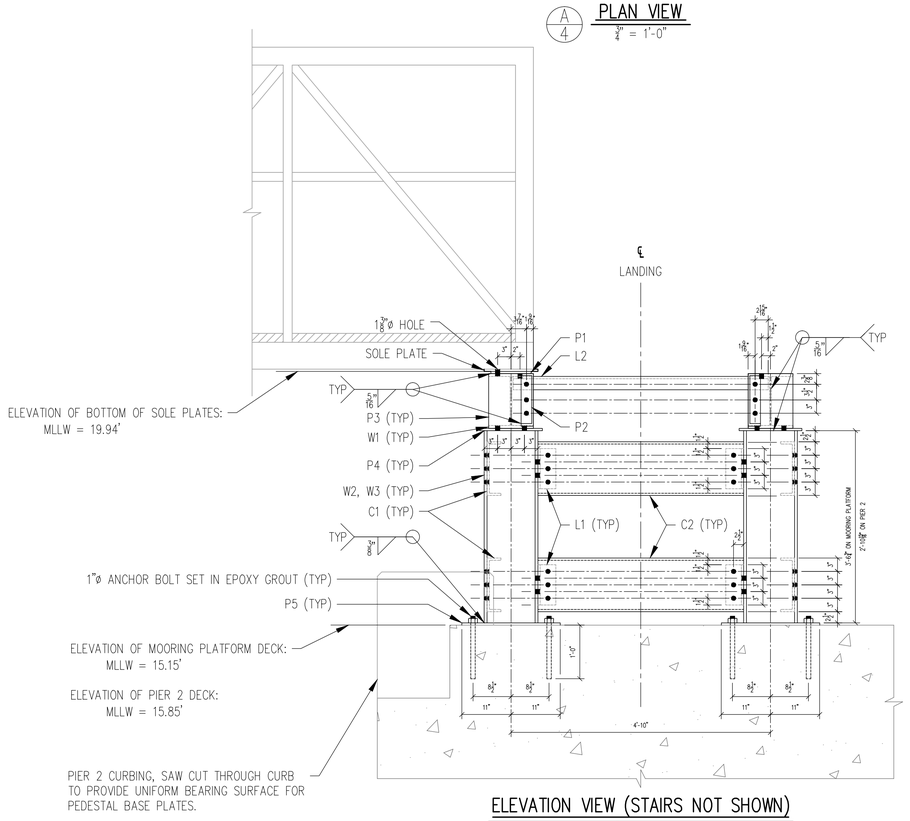

ELEVATION VIEW (STAIRS NOT SHOWN)
3/4" = 1'-0"

BILL OF MATERIALS

DESCRIPTION	LENGTH	QUANTITY	MARK
W12 x 58	6'-3 1/8"	(4)	W1
W12 x 58	3'-6 3/4"	(4)	W2 (MOORING PLATFORM)
W12 x 58	2'-10 9/16"	(4)	W3 (PIER 2)
C12 x 30	4'-7"	(4)	C1
C12 x 30	3'-9 1/4"	(8)	C2
C12 x 30	4'-9"	(4)	C3 (TOP BRACE)
C12 x 30	6'-5 5/8"	(4)	C4 (STAIRS)
∠ 4 x 4 x 1/2"	0'-9"	(16)	L1
∠ 3 x 3 x 1/2"	4'-9"	(4)	L2
PL 1/2" x 9"	0'-11 1/2"	(4)	P1
PL 1/2" x 2 3/4"	0'-11 1/2"	(4)	P2
PL 1/2" x 10"	1'-0 1/4"	(8)	P3
PL 1" x 1'-0"	1'-2"	(8)	P4
PL 1" x 1'-4"	1'-10"	(8)	P5
PL 1/2" x 2 3/4"	0'-9 1/2"	(4)	P6

BOLT LIST

DIAMETER	GRIP	LENGTH	LOCATION	QUANTITY
7/8"	1 1/8"	2 1/2"	W1/C3	(24)
7/8"	1 1/8"	2 1/2"	W1/L2	(8)
7/8"	1 1/2"	2 3/4"	L2/P3/P2	(4)
7/8"	1 1/8"	2 1/2"	L2/P3	(4)
7/8"	1 1/8"	2 1/2"	P2/P3	(8)
7/8"	1 1/8"	2 1/2"	W1/P4	(32)
7/8"	1 1/8"	2 1/2"	W2,W3/C1	(48)
7/8"	1 1/8"	2 1/2"	W2,W3/L1	(32)
7/8"	1 1/8"	2 1/2"	L1/C2	(48)
7/8"	1 5/8"	3"	W1/P1/P0	(4)

NOTES

1. ALL DIMENSIONS SYMMETRICAL ABOUT CENTER LINES AS SHOWN UNLESS OTHERWISE NOTED.
2. ALL OPEN HOLES 15/16" DIAMETER UNLESS OTHERWISE NOTED.
3. STAIRS AND LANDINGS SHALL HAVE 42" HIGH WELDED PIPE RAILINGS WITH A MID RAIL 21" BELOW THE TOP RAIL.
4. SOLE PLATES PROVIDED BY BRIDGE FABRICATOR.

STATE OF MAINE
WAYNE WOLSON
LICENSED
PROFESSIONAL ENGINEER
9/24/14

CITY OF PORTLAND, MAINE
PUBLIC BUILDINGS DIVISION

OCEAN GATEWAY PIER 2
MOORING PLATFORM CATWALK
STEEL PEDESTAL LANDING DETAILS

TEC ASSOCIATES CONSULTING ENGINEERS
46 SAWYER STREET SOUTH PORTLAND, MAINE 04106

SCALE	AS SHOWN	DATE	25 JUNE 2014
JOB NUMBER 1301-6	DRAWN BY NJR	DESIGNED BY NJR	DRAWING NO. 4

LIGHTING SCHEDULE

TYPE	DESCRIPTION	MANFACTURER	LAMPS	MOUNTING	NOTES
A	POLE MOUNTED FIXTURE WITH FULL CUTOFF. 277V	RAB LIGHTING	26W LED 5000K 2662 LUMENS	10' PIER SUPPORT	MODEL #: WP LED26W/PC

NOTES:

1. SEE E0.0 FOR LEGEND, ABBREVIATIONS AND GENERAL NOTES.

KEYED NOTES:

1. CONNECT EXISTING WIRING SHOWN ON PLAN TO 20A, IP BREAKER IN EXISTING PANEL
2. SPLICE NEW CIRCUIT CONDUCTORS FOR LIGHTS TO EXISTING WIRING IN THIS PULLBOX
3. SECURE CONDUIT TO SIDE OF CONCRETE PIER. FURNISH ALL SUPPORT HARDWARE REQUIRED FOR A COMPLETE INSTILLATION. ALL SUPPORT HARDWARE SHALL BE STAINLESS STEEL.
4. PROVIDE LIGHT SWITCH AND TIME CLOCK CONTROLLER NEMA 4X STAINLESS STEEL ENCLOSURE. MOUNT 48"AFF.
5. SEE STRUCTURAL PLANS FOR POLE MOUNTING DETAIL. MOUNTING HEIGHT SHALL MATCH THAT OF THE FIXTURES ON THE CATWALK (APPROXIMATELY 1.3') ABOVE DOLPHIN PLATFORM. COORDINATE THIS HEIGHT WITH THE CATWALK MANUFACTURER ANCHOR BASE PLATE TO CONCRETE STRUCTURE. INSTALL CONDUIT UNDER DOLPHIN AND RISE UP POLE.

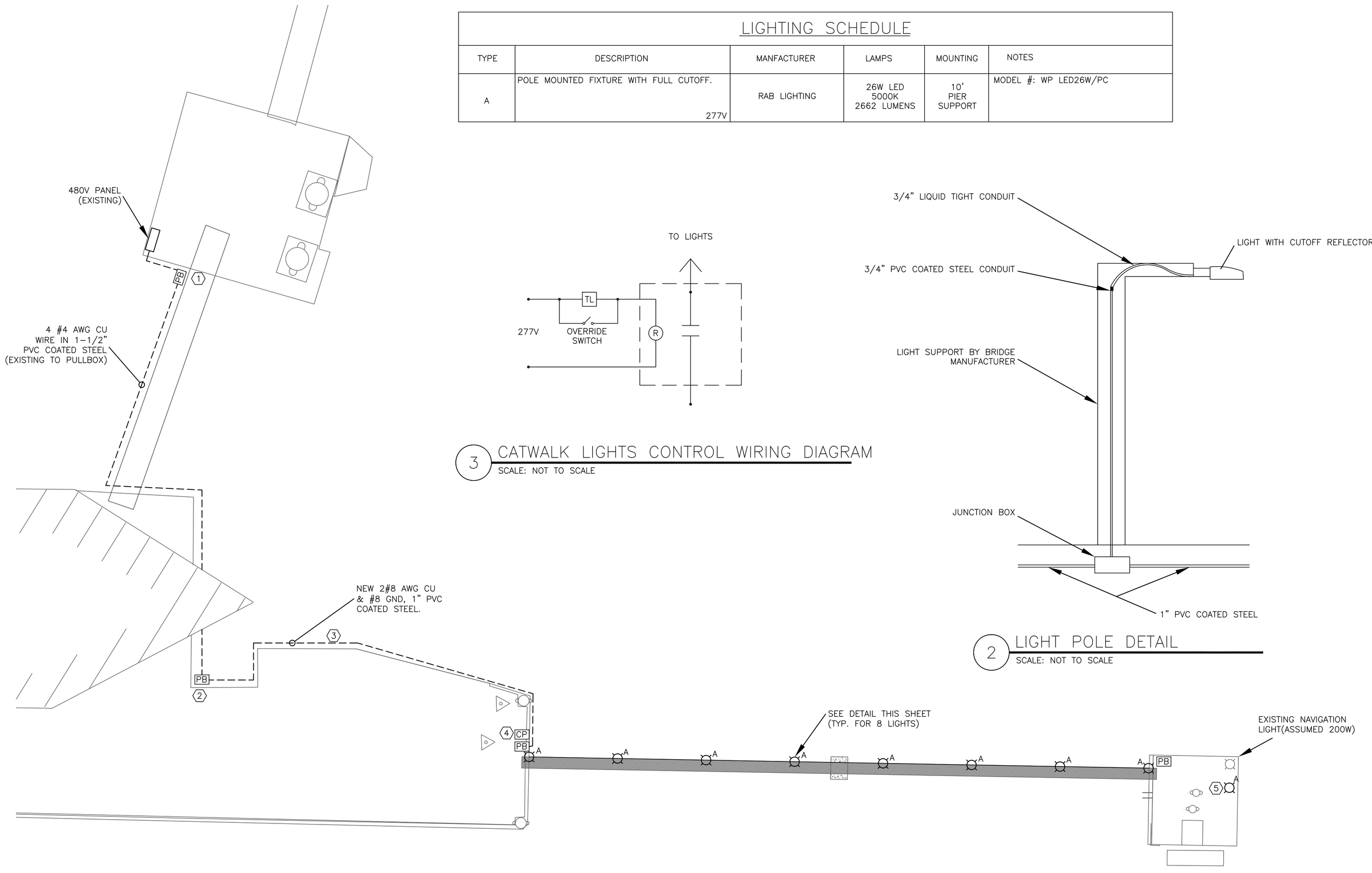

1 ELECTRICAL SITE PLAN
SCALE: 1:20

2 LIGHT POLE DETAIL
SCALE: NOT TO SCALE

3 CATWALK LIGHTS CONTROL WIRING DIAGRAM
SCALE: NOT TO SCALE

KEY:

- PULL BOX
- PB PULL BOX
- CP CONTROL PANEL
- TL TIME CLOCK
- RELAY CONTACT
- R RELAY
- PANEL BOARD
- SWITCH

REV	BY	DATE	STATUS

OCEAN GATEWAY PIER
PORTLAND, MAINE

ELECTRICAL LIGHTING AND POWER PLAN

STATE OF MAINE TIMOTHY D. MATTHEWS No. 8199 LICENSED PROFESSIONAL ENGINEER

SWIFTCURRENT
Engineering Services
10 Forest Falls Dr.
Unit 4b
Yarmouth, ME 04096
Tel: (207) 847-9280

DESIGN BY: TDM
DRAWN BY: JMD
DATE: 7/25/2014
JOB:
SCALE: AS NOTED

ES1.0