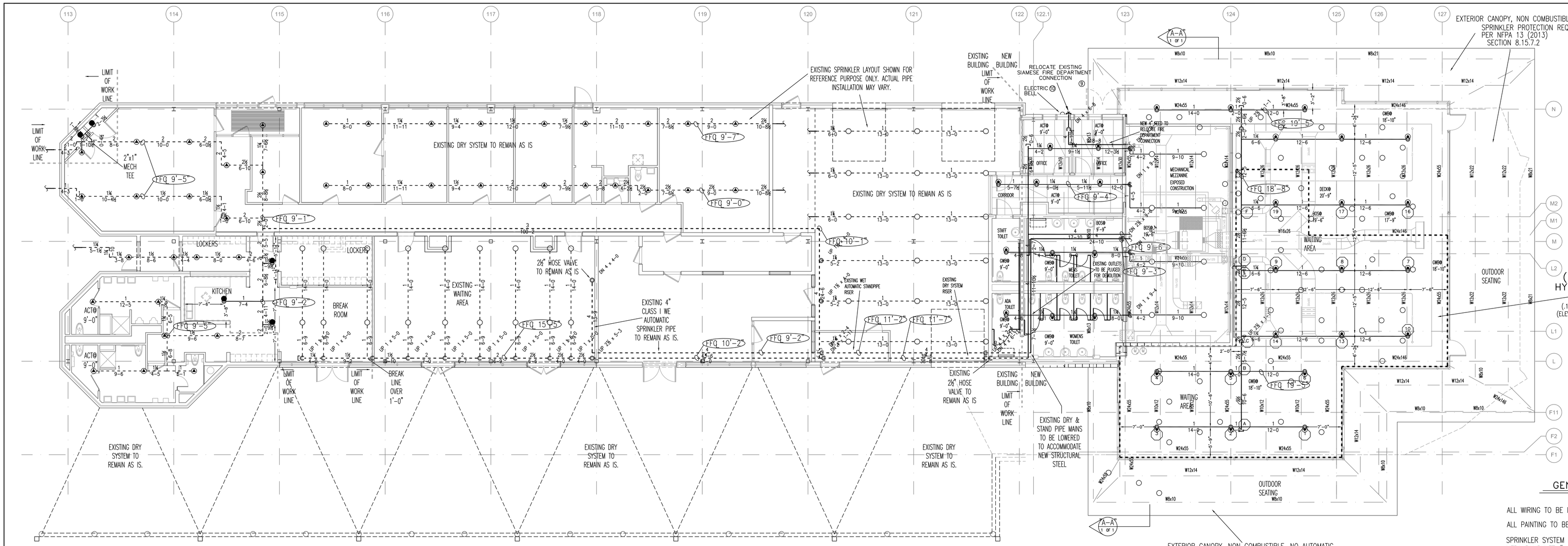

FIRE SPRINKLER PLAN – MAIN LEVEL

SCALE: 1/8"=1'-0"
AREA PROTECTED: 18,700 SQ.FT.
FINISH FLOOR ELEVATION : 112'-4"
COLOR CODE: WHITE

DRY SYSTEM PIPING TO BE PITCHED IN COMPLIANCE WITH NFPA 13(2013)
LINE PIPING TO BE PITCHED A MINIMUM OF ½" PER FT.
MAIN PIPING TO BE PITCHED A MINIMUM OF ¾" PER FT.

EXTERIOR CANOPY, NON COMBUSTIBLE. NO AUTOMATIC SPRINKLER PROTECTION REQUIRED PER NFPA 13 (2013) SECTION 8.15.7.2

Sprinkler Head Schedule

Symbol	Count	Thread	K-Factor	Temp.	Description	Note
◉	34	1/2"	5.6	200°	TYCO TY-FRB WHITE PENDENT SIN #TY323	on Drop
○	35	1/2"	5.6		EXISTING UPRIGHTS	on Drop
◉	40	1/2"	5.6		EXISTING PENDENTS	on Drop
○	8	1/2"	5.6	200°	TYCO TY-B BRASS UPRIGHT SIN# TY315	on Sprig
●	5	1/2"	5.6	200°	TYCO TY-B CHROME PENDENT SIN# TY325	
117 = Total Number of Heads this floor						

GENERAL NOTES

ALL WIRING TO BE DONE BY OTHERS

ALL PAINTING TO BE DONE BY OTHERS

SPRINKLER SYSTEM INSTALLATION TO COMPLY WITH NFPA PAMPHLET # 13 (2013 EDITION)

ALL DIMENSIONS ARE SHOWN FOR GENERAL LOCATION OF SPRINKLER HEADS ; PIPING MAY VARY TO SUIT ACTUAL FIELD CONDITIONS.

PENDENT SPRINKLERS TO BE INSTALLED CENTERLINE OF ACCOUSTICAL CEILING TILES.

ACOUSTICAL CEILING TILE (ACT) TO BE LISTED NON-COMBUSTIBLE WITH UL FLAME SPREAD OF LESS THAN 25.

OCCUPANCY DESCRIPTION AND CLASSIFICATION:
OFFICES, BATHROOMS, WAITING; LIGHT HAZARD
MECHANICAL AND STORAGE ROOMS; ORDINARY HAZARD I

⬡ = INDICATES HYDRAULIC REFERENCE POINTS.
F.F. ℄ INDICATES FINISH FLOOR UP TO CENTERLINE OF PIPE.
D ℄ INDICATES DECK DOWN TO CENTERLINE OF PIPE.
- - - - - - - - - - INDICATES EXISTING SPRINKLER PIPE
———————— INDICATES NEW SPRINKLER PIPE

SCOPE OF WORK:

REWORK EXISTING DRY SYSTEM TO ACCOMMODATE FLOOR PLAN CHANGES IN RENOVATED AREAS. EXTEND EXISTING DRY SYSTEM TO PROTECT 2013 ADDITION. EXISTING SPRINKLER PROTECTION IN ALL OTHER PORTIONS OF THE BUILDING TO REMAIN AS IS.

EXISTING CLASS I WET AUTOMATIC STANDPIPE TO REMAIN AS IS.

ALL DEMOLITION OF EXISTING SPRINKLER PIPE BY OTHERS. EASTERN FIRE PROTECTION TO CUT AND CAP EXISTING SPRINKLER LINES IN PORTION OF THE BUILDING TO BE DEMOLISHED.

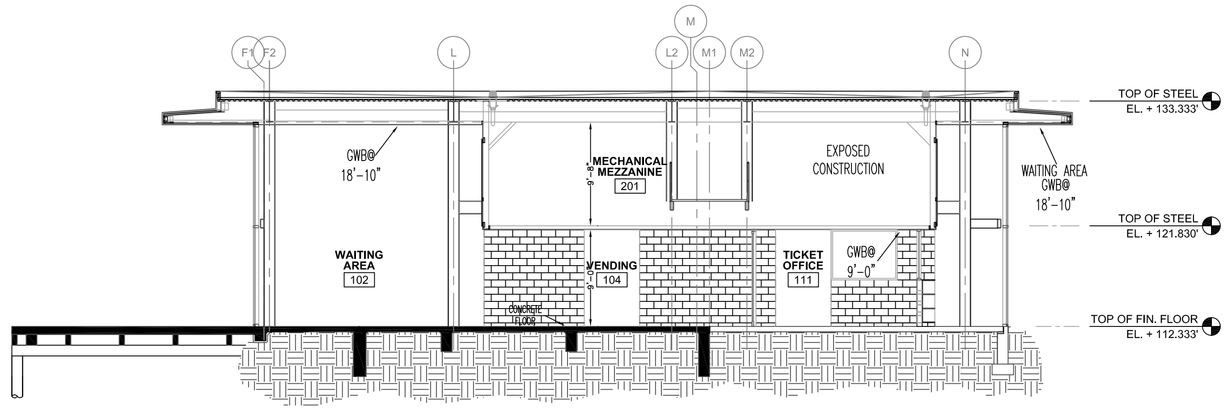

CROSS SECTION "A-A"

SCALE: N.T.S.

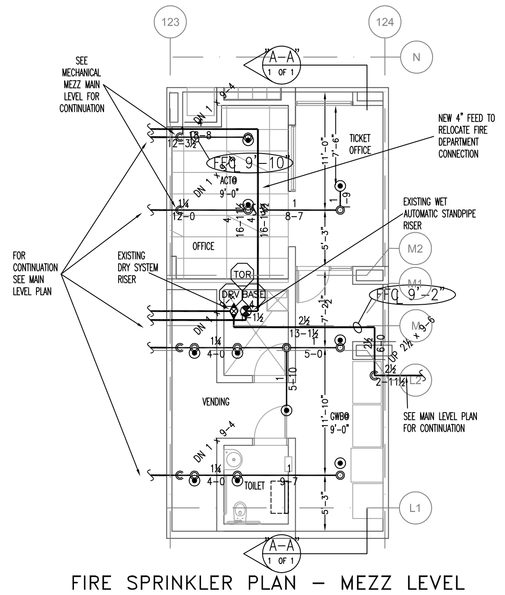

FIRE SPRINKLER PLAN – MEZZ LEVEL

SCALE: 1/8"=1'-0"
AREA PROTECTED: 800 SQ.FT.
FINISH FLOOR ELEVATION : 112'-4"
COLOR CODE: WHITE

Sprinkler Head Schedule

Symbol	Count	Thread	K-Factor	Description	Note
◉	10	1/2"	5.6	TYCO TY-FRB WHITE PENDENT SIN #TY323	on Drop
10 = Total Number of Heads this floor					

HYDRAULIC-SYSTEM

THIS BUILDING IS PROTECTED BY A HYDRAULICALLY DESIGNED AUTOMATIC SPRINKLER SYSTEM.

LOCATION: WAITING AREA
No. OF SPRINKLERS: 13 (CALCULATED)
BASIS OF DESIGN:
1. DENSITY (GPM/SQ.FT.) .1
2. DESIGNED AREA OF DISCHARGE (sq.ft.) 2,059
SYSTEM DEMAND:
1. WATER FLOW RATE (GPM) 275.85
2. RESIDUAL PRESSURE AT THE BASE OF THE RISER 56.03 (PSI)

HYDRAULIC DATA NAMEPLATE
TO BE MOUNTED AT SYSTEM RISER

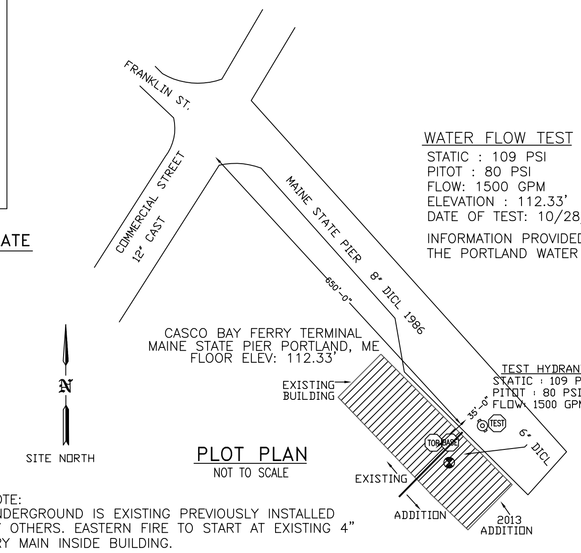

WATER FLOW TEST
STATIC : 109 PSI
PITOT : 80 PSI
FLOW: 1500 GPM
ELEVATION : 112.33'
DATE OF TEST: 10/28/2013
INFORMATION PROVIDED BY: THE PORTLAND WATER DISTRICT

PLOT PLAN

NOT TO SCALE

NOTE:
UNDERGROUND IS EXISTING PREVIOUSLY INSTALLED BY OTHERS. EASTERN FIRE TO START AT EXISTING 4" DRY MAIN INSIDE BUILDING.

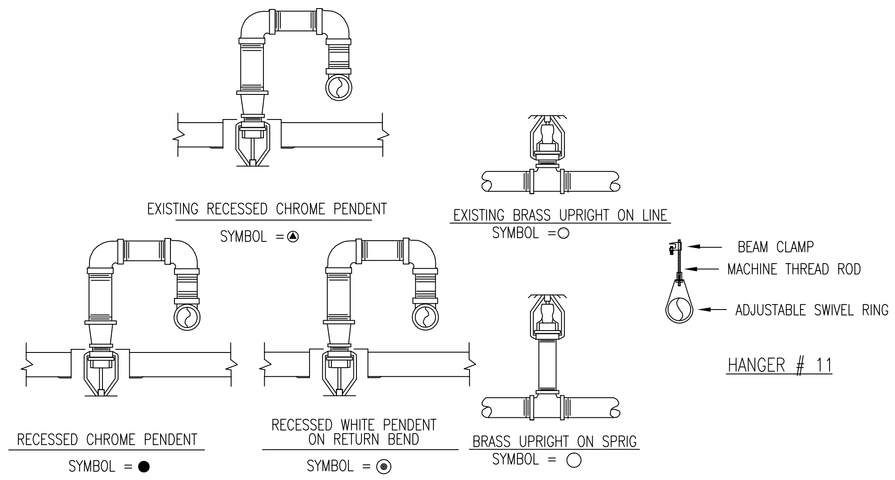

SPRINKLER HEAD DETAILS

NOT TO SCALE

HANGER # 11

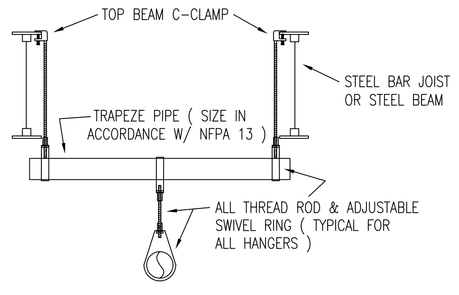

HANGER # 14T

HANGER DETAILS

NOT TO SCALE

ALL HANGERS TO BE PROVIDED AND INSTALLED AS PER NFPA # 13
3/8" ROD FOR 1" TO 4" PIPE

NOTE: BEAM CLAMP TO BE ATTACHED TO ANGLE OF STEEL JOIST AND/OR BEAM FLANGES.

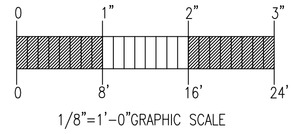

1/8"=1'-0"GRAPHIC SCALE

GENERAL NOTES	DATE	REVISIONS	REQUIRED APPROVALS	CASCO BAY FERRY TERMINAL	FIRE SPRINKLER PLANS & DETAILS
SPRINKLER SYSTEM INSTALLATION TO COMPLY WITH NFPA PAMPHLET # 13 (2013)			OWNER STATE FIRE MARSHAL PORTLAND FIRE DEPARTMENT	2013 RENOVATIONS & ADDITION PORTLAND, ME	DWG. NO. 1 OF 1
NEW BRANCH LINE PIPING (1"-2") TO BE BLACK SCHEDULE 40 JOINED BY THREADED DUCTILE IRON FITTINGS			DRAWN BY DLC NICET LEVEL CERT.#	CONTRACT WITH: LANDRY FRENCH CONSTRUCTION	JOB NUMBER AU-5061-13
NEW MAIN PIPING (2½"-4") TO BE SCHEDULE # 10 BLACK WITH GROOVED ENDS & WELDED OUTLETS JOINED BY MECHANICAL COUPLINGS			CHECKED BY WAF NICET LEVEL III CERT.# 095574	EASTERN FIRE PROTECTION AUBURN/LEWISTON INDUSTRIAL AIRPARK, AUBURN, MAINE 04210	SCALE AS SHOWN
OWNER TO PROVIDE SUFFICIENT HEAT AT THE SPRINKLER RISER. ALL LOCATIONS WHERE PENDENT SPRINKLERS ARE INSTALLED ON RETURN BENDS. TO PREVENT FREEZING OF WATER FILLED SPRINKLER PIPING AND EQUIPMENT. (MIN. 40° F)			CONTRACTOR LICENSE # 101 CONTRACTOR RMS # 368		DATE 10/24/2013