NOTES:

1. SEE DRAWING E100 FOR GENERAL NOTES AND LEGEND.

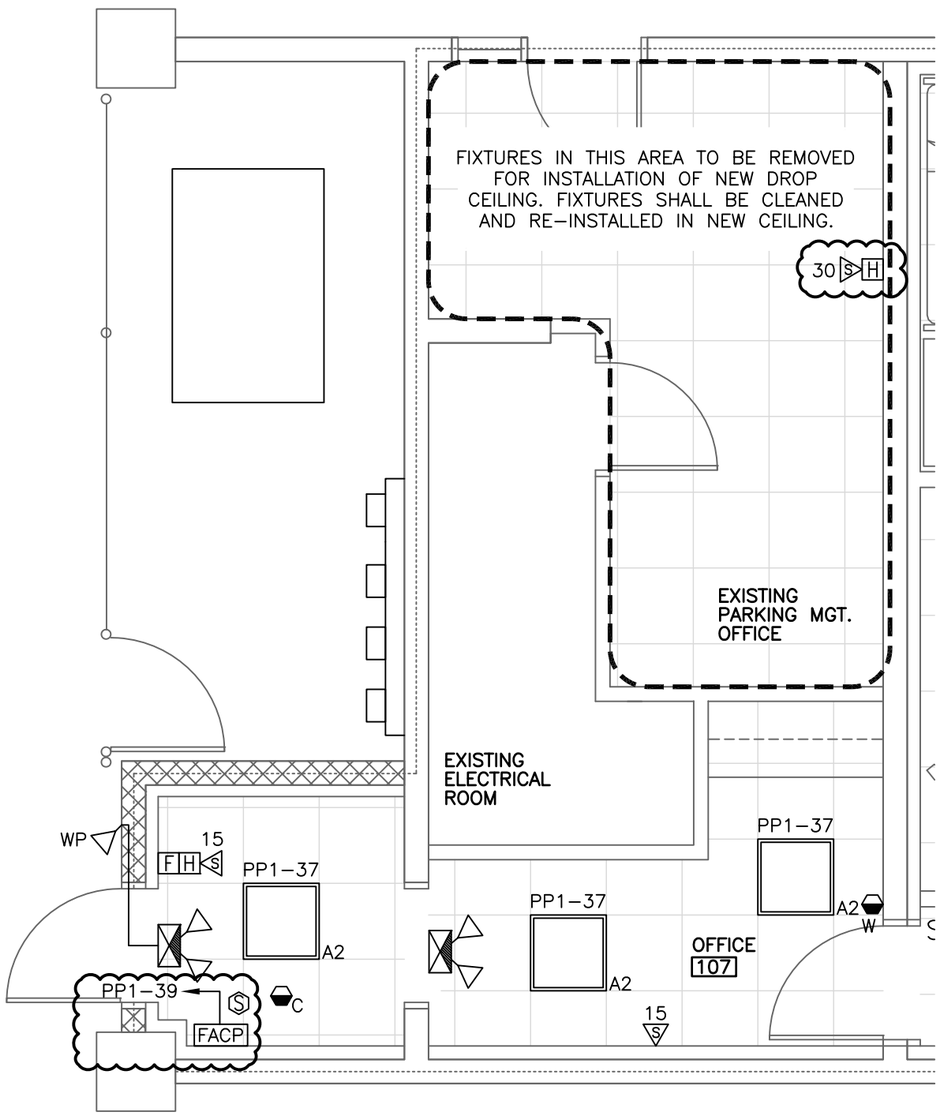

1 ELECTRICAL LIGHTING & FIRE ALARM PLAN

SCALE: 1/4" = 1'-0"

REF DWG: E201

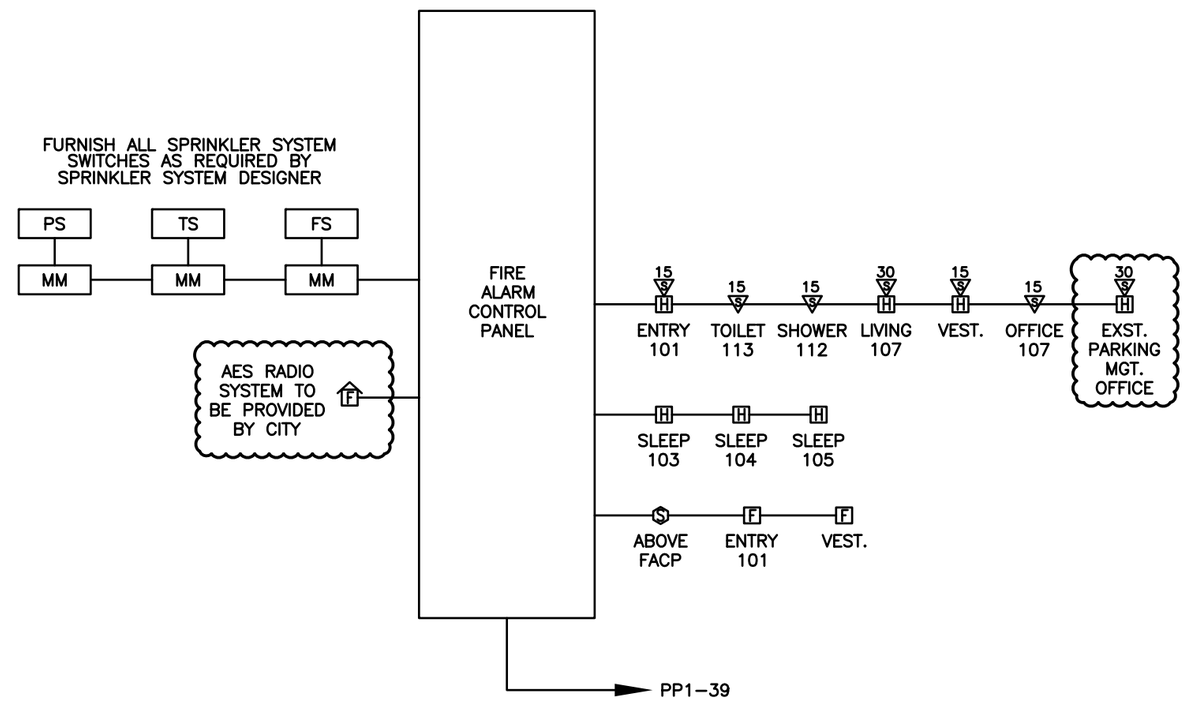

3 FIRE ALARM RISER DIAGRAM

SCALE: N.T.S.

REF DWG: E201

SWIFTCURRENT
Engineering Services
273 Main Street
Yarmouth, ME 04096
Tel: (207) 847-9280

PORTLAND FIRE BOAT PORTLAND, ME	
SCALE: AS NOTED	
DATE: 04-25-2013	
SKE2	