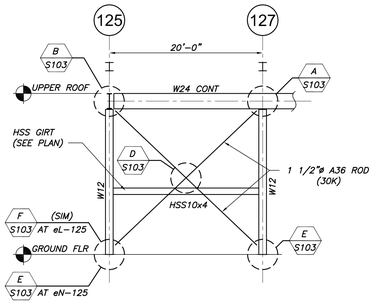

BF-1 AT eN & eL LINE

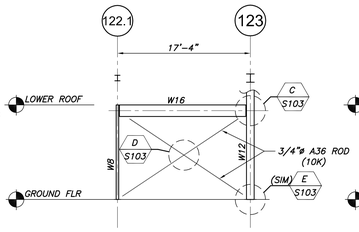

BF-2 AT M2 LINE

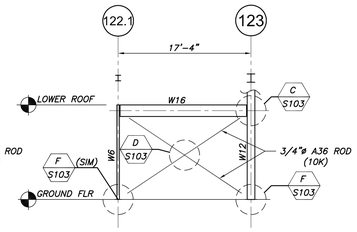

BF-3 AT eL LINE

BRACED FRAME ELEVATIONS

1/8"=1'-0"

BRACING CONNECTION DESIGN NOTES:

1. (xx) INDICATES BRACING DESIGN FORCES ON THE ADJACENT ELEVATIONS. DESIGN IS AN R=3 DESIGN.
2. BRACE CONNECTIONS SHALL BE DESIGNED UTILIZING THE UNIFORM FORCE METHOD AND SHALL BE DESIGNED SO AS NOT TO INDUCE MOMENTS INTO THE BEAMS OR COLUMN.
3. ALL FORCES PROVIDED ARE ASD (SERVICE LOADS).
4. ALL FORCES ARE TO BE CONSIDERED TENSION ONLY.
5. DESIGN SHALL BE IN ACCORDANCE WITH THE AISC MANUAL OF STD PRACTICE, 13TH EDITION.
6. SUBMIT A FIELD WELDING PROCEDURE PREPARED BY AN AWS CERTIFIED WELDING ENGINEER FOR REVIEW PRIOR TO COMMENCING FIELD WELDING. WELDING PROCEDURE SHALL BE MADE AVAILABLE TO THE WELDING INSPECTOR UPON REQUEST.

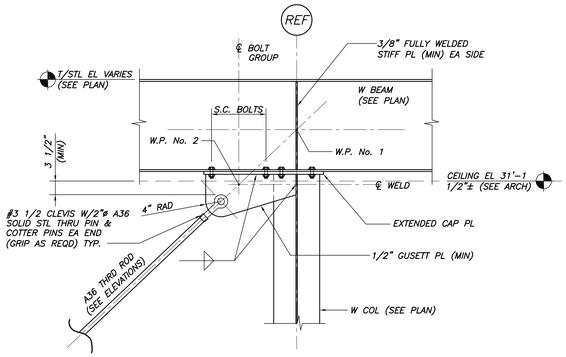

DETAIL A S103
3/4"=1'-0"

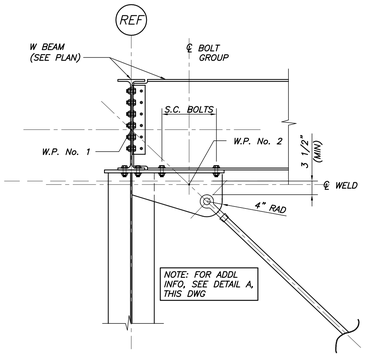

DETAIL B S103
3/4"=1'-0"

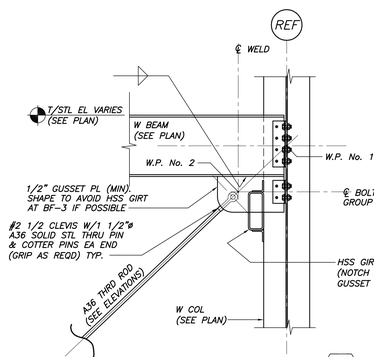

DETAIL C S103
3/4"=1'-0"

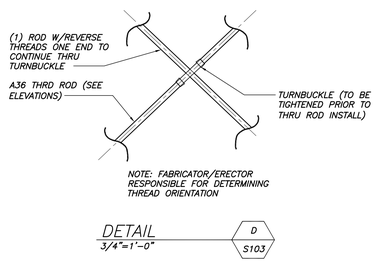

DETAIL D S103
3/4"=1'-0"

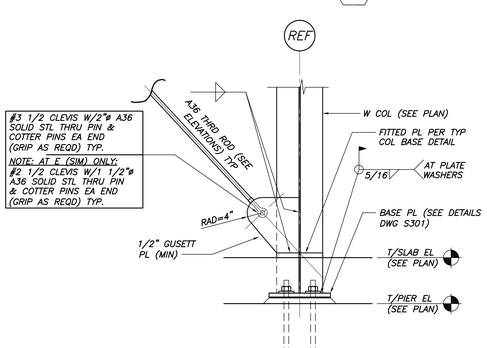

DETAIL E S103
3/4"=1'-0"

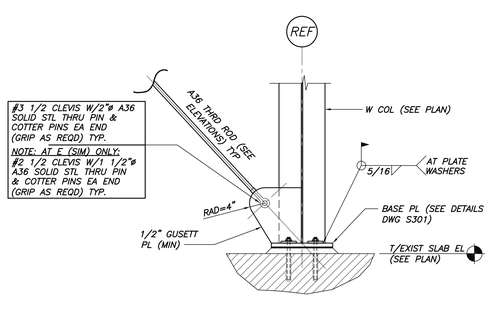

DETAIL F S103
3/4"=1'-0"

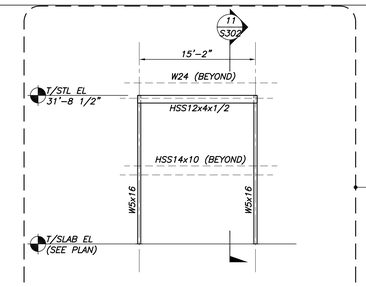

DOOR FRAME DF-1 ELEVATION

1/8"=1'-0"

NOTES:

1. ALL COMPONENT SIZES & LOCATIONS SHALL BE VERIFIED W/APPROVED WILSON BI-FILD DOOR SHOP DWGS.
2. ALL FRAME COMPONENTS SHALL BE TREATED AS ARCHITECTURALLY EXPOSED STRUCTURAL STEEL. SEE SPECIFICATIONS FOR ADDL INFO.

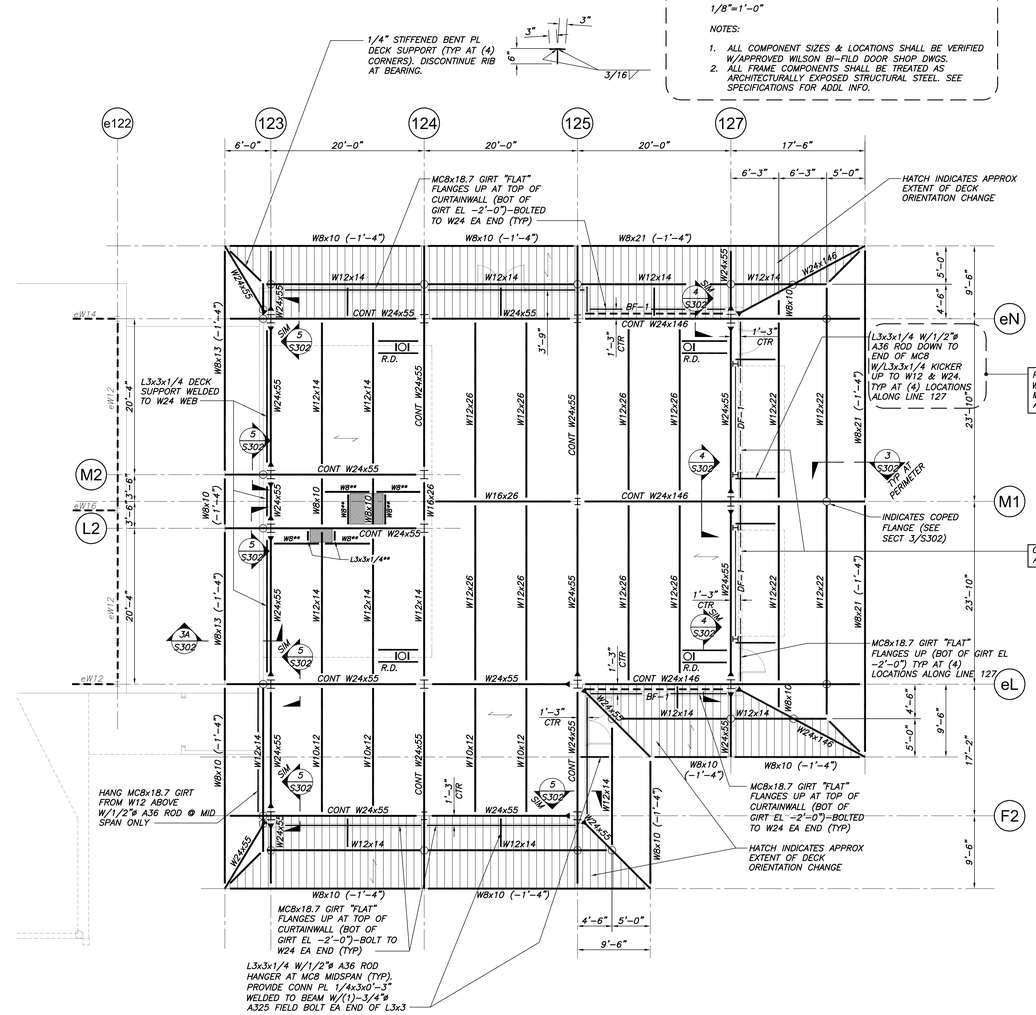

UPPER ROOF FRAMING PLAN

1/8"=1'-0"

NOTES:

1. TOP OF STEEL EL 33'-4" U.N.O. BY (-1'-4"), ETC.
2. ←→ INDICATES SPAN DIRECTION OF 1.5B20 GA PAINTED METAL ROOF DECK (3-SPAN MIN).
3. ▶— INDICATES MOMENT CONNECTION LOCATION. SEE TYP DETAILS, DWG S301.
4. BF- INDICATED BRACED FRAME LOCATION. SEE BRACED FRAME ELEVATIONS AND DETAILS, THIS DWG.
5. ⊥ INDICATES EXISTING STRUCTURAL MEMBER TO REMAIN.
6. DF- INDICATES STRUCTURAL DOOR FRAME. SEE ELEVATION THIS DWG.
7. —⊖ INDICATES COPED TOP FLANGE LOCATION. SEE SECT 3/S302 FOR ADDL INFO.
8. R.D. INDICATES ROOF DRAIN. REF ARCH/MECH DWGS FOR NUMBER & LOCATIONS. SEE TYP DET DWG S301.
9. ** INDICATES FRAMING FOR HUNG AHU & ERV SUPPORT. G.C. SHALL COORD LOCATION OF BEAMS W/MEP & APPROVED UNIT SHOP DWGS. G.C. COORD AND PROVIDE HANGERS & ATTACHMENTS.
10. SPRINKLER PIPE PENETRATIONS ARE PERMITTED WITH THE FOLLOWING CRITERIA:
    - W24's ONLY (SIMPLE SPAN-NO CANTILEVERS)
    - 6"ø MAX SHOP CORE DIAMETER
    - CENTER IN WEB DEPTH
    - WITHIN MID 1/3 OF BEAM SPAN
    - 4'-0" MIN BETWEEN PENETRATIONS
    - SUBMIT ANY PENETRATIONS NOT MEETING ABOVE CRITERIA TO STRUCTURAL ENGINEER OF RECORD FOR REVIEW.

BECKER STRUCTURAL ENGINEERS
75 York Street, Portland, Maine 04101
207.879.1838 ▪ beckerstructural.com

Scott Simons Architects
75 York Street, Portland, Maine 04101
www.simonsarchitects.com
207.772.4656

PROJECT NAME:

CASCO BAY FERRY TERMINAL

RENOVATIONS & ADDITIONS
56 COMMERCIAL STREET
PORTLAND, MAINE 04101

SEAL:

STATE OF MAINE NATHAN R. MERRILL No. 15279 PROFESSIONAL ENGINEER

THIS DRAWING IS THE PROPERTY OF SCOTT SIMONS ARCHITECTS (SSA) AND IS NOT TO BE COPIED OR REPRODUCED IN PART OR WHOLE.
2012 © SCOTT SIMONS ARCHITECTS, LLC

REVISION:

1	DATE
2	DATE
3	DATE
4	DATE
5	DATE
6	DATE

DATE OF ISSUE:	May 14, 2013
PROJECT NUMBER:	2011-0270
STATUS:	ISSUED FOR BIDDING

UPPER ROOF FRAMING PLANS, BRACING ELEVATIONS AND DETAILS

S103

2008 © Scott Simons Architects,LLC