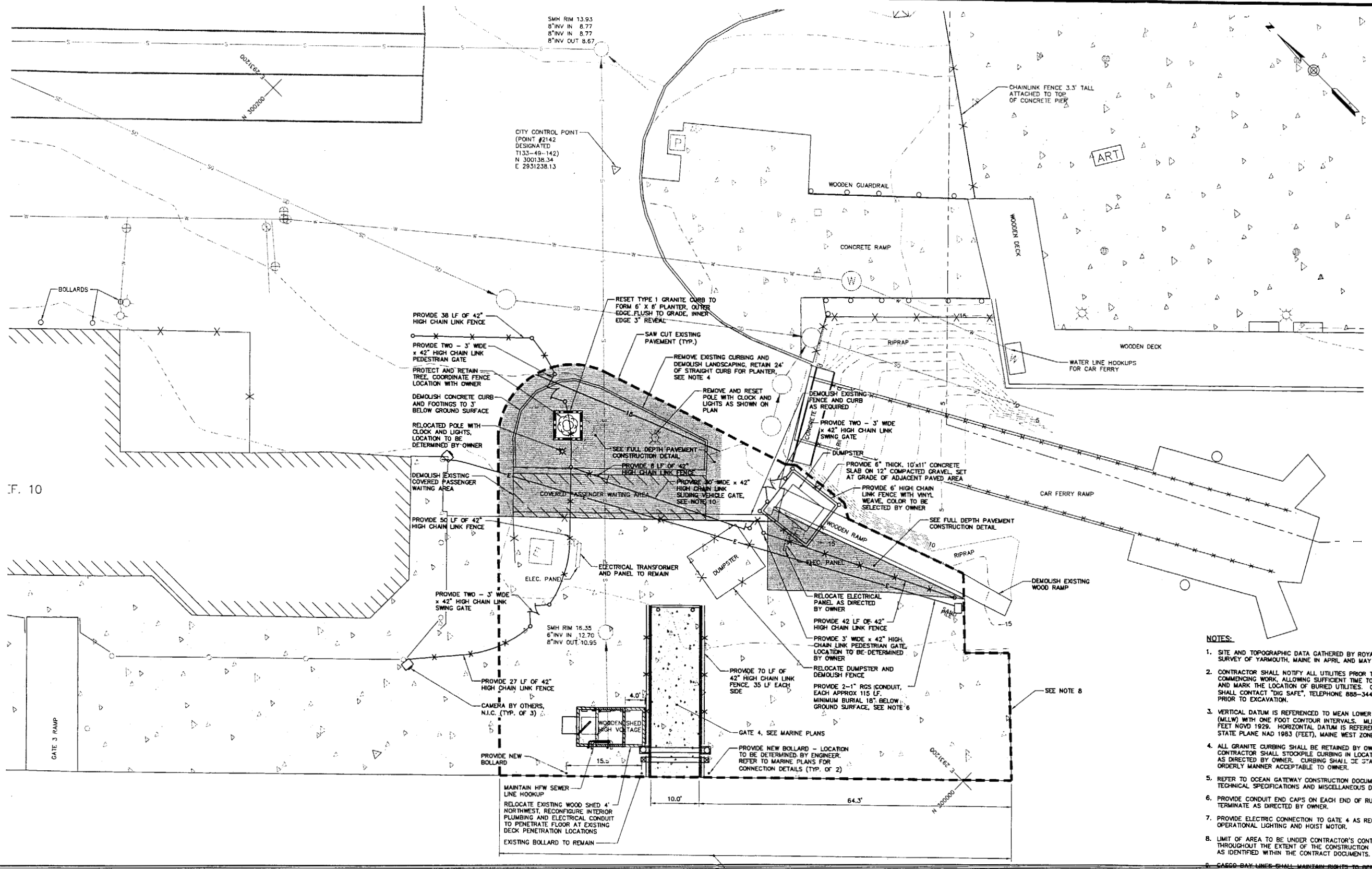

NOTES:

1. SITE AND TOPOGRAPHIC DATA GATHERED BY ROYAL RIVER SURVEY OF YARMOUTH, MAINE IN APRIL AND MAY OF 2005.
2. CONTRACTOR SHALL NOTIFY ALL UTILITIES PRIOR TO COMMENCING WORK, ALLOWING SUFFICIENT TIME TO LOCATE AND MARK THE LOCATION OF BURIED UTILITIES. CONTRACTOR SHALL CONTACT "DIG SAFE", TELEPHONE 888-344-7233, PRIOR TO EXCAVATION.
3. VERTICAL DATUM IS REFERENCED TO MEAN LOWER LOW WATER (MLLW) WITH ONE FOOT CONTOUR INTERVALS. MLLW IS -4.57 FEET NGVD 1929. HORIZONTAL DATUM IS REFERENCED TO STATE PLANE NAD 1983 (FEET), MAINE WEST ZONE.
4. ALL GRANITE CURBING SHALL BE RETAINED BY OWNER. CONTRACTOR SHALL STOCKPILE CURBING IN LOCATION ON SITE AS DIRECTED BY OWNER. CURBING SHALL BE STACKED IN ORDERLY MANNER ACCEPTABLE TO OWNER.
5. REFER TO OCEAN GATEWAY CONSTRUCTION DOCUMENTS FOR TECHNICAL SPECIFICATIONS AND MISCELLANEOUS DETAILS.
6. PROVIDE CONDUIT END CAPS ON EACH END OF RUN AND TERMINATE AS DIRECTED BY OWNER.
7. PROVIDE ELECTRIC CONNECTION TO GATE 4 AS REQUIRED FOR OPERATIONAL LIGHTING AND HOIST MOTOR.
8. LIMIT OF AREA TO BE UNDER CONTRACTOR'S CONTROL THROUGHOUT THE EXTENT OF THE CONSTRUCTION TIMEFRAME, AS IDENTIFIED WITHIN THE CONTRACT DOCUMENTS.
9. ~~CASCO BAY LINES SHALL MAINTAIN RIGHTS TO BERTH VESSEL ALONG EXTENT OF PIER.~~ CONTRACTOR SHALL CONTACT CASCO BAY LINES IN WRITING A MINIMUM OF 48 HOURS PRIOR TO REQUIRING A VESSEL TO BE RELOCATED.
10. SLIDING GATE MOTOR SHALL BE EQUIPPED WITH MANUAL OPEN/CLOSE SWITCHES LOCATED AT, OR ACCESSIBLE FROM ~~BOTH SIDES OF OF THE GATE.~~ MOTOR SHALL BE CAPABLE OF OPENING 30' WIDE x 42" HIGH CHAIN LINK GATE, AS IDENTIFIED WITHIN MANUFACTURER'S LITERATURE. MOTOR SHALL BE DESIGNED FOR EXTERIOR APPLICATIONS AND SHALL BE EQUIPPED WITH ELECTRICAL OR MECHANICAL/ELECTRICAL "ANTI CRUSH" OVERRIDES THAT STOP MOTOR IF FENCE MEETS RESISTANCE UPON CLOSING OR OPENING. MOTOR SHALL BE EQUIPPED WITH EMERGENCY RELEASE AND MANUAL CRANK CAPABILITY.

10' 0 10' 20'
BAR SCALE
1" = 10'
CHECK GRAPHIC SCALE BEFORE USING

WOODARD & CURRAN
Engineering • Science • Operations
41 Hutchins Drive - Portland, Maine 04102

STATE OF MAINE
DEPARTMENT OF TRANSPORTATION

PROJECT NUMBER 009215.00

009215.00

		BY	DATE
PROJ. MANAGER	PAUL POTTLE		
DESIGN-DETAILED	BFC	JMC	12-13-05
CHECKED-REVIEWED	DAB	DBS	06-09-05
DESIGN2-DETAILED2	DAS	DAS	11-11-02
DESIGN3-DETAILED3	DAS		
REVISIONS 1			
REVISIONS 2			
REVISIONS 3			
REVISIONS 4			
FIELD CHANGES			

SIGNATURE

P.E. NUMBER

DATE

CA. CO BAY ISLAND TRANSIT
D. STRICT IMPROVEMENTS
GATE 4

SITE PLAN

C200

Filename: \\PORTLAND\Projects\203816 CBITD Improvements - Engineering Services\01 Permitting and Design\Deliverables\2006-02-10, gate 4 Const\20381901-C200C-GRADE-G4.dwg, Feb 10,2006 - 4:11pm

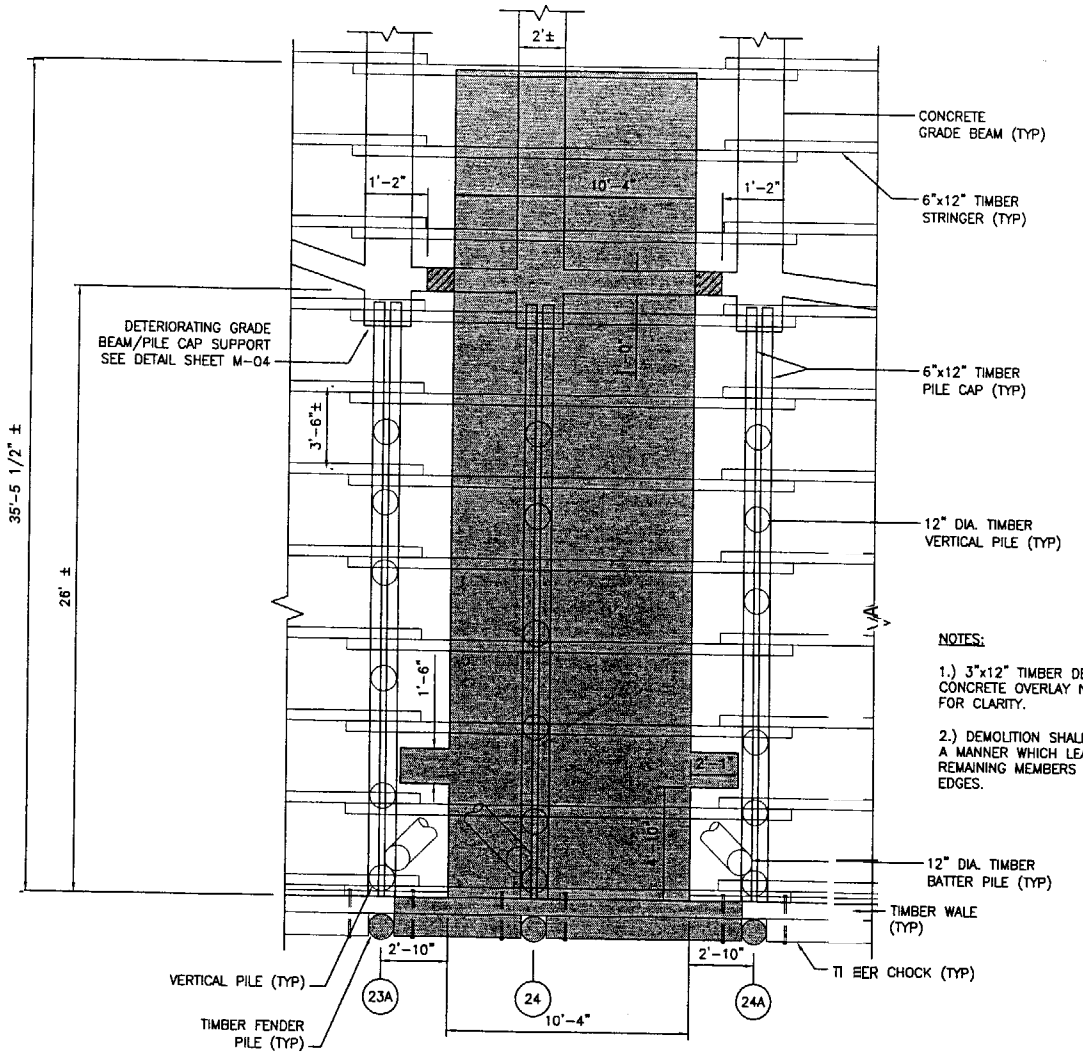

EXISTING/DEMOLITION PLAN

SCALE: 1/4"=1'-0"

DEMOLITION LEGEND

DEMOLITION AREA
ITEMS INCLUDE:
- 8" CONCRETE OVERLAY
- 3"x12" TIMBER DECK
- 6"x12" TIMBER STRINGERS
- 6"x12" TIMBER PILE CAPS
- 12" DIA. TIMBER VERTICAL PILES
- 12" DIA. TIMBER BATTER PILES
- 12" DIA. TIMBER FENDER PILES
- 12"x12" TIMBER CHOCKS
- CONCRETE GRADE BEAM

REMOVE CONCRETE GRADE BEAM ONLY

NOTES:

1.) 3"x12" TIMBER DECK & 8"± CONCRETE OVERLAY NOT SHOWN FOR CLARITY.

2.) DEMOLITION SHALL BE DONE IN A MANNER WHICH LEAVES ALL REMAINING MEMBERS WITH SQUARE EDGES.

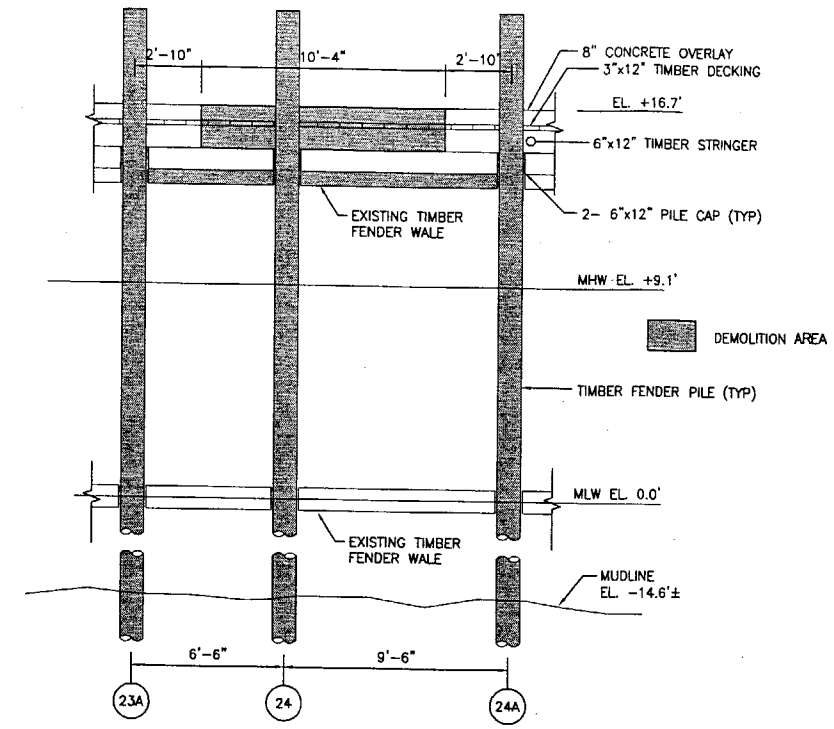

EXISTING/DEMOLITION ELEVATION

SCALE: 1/4"=1'-0"

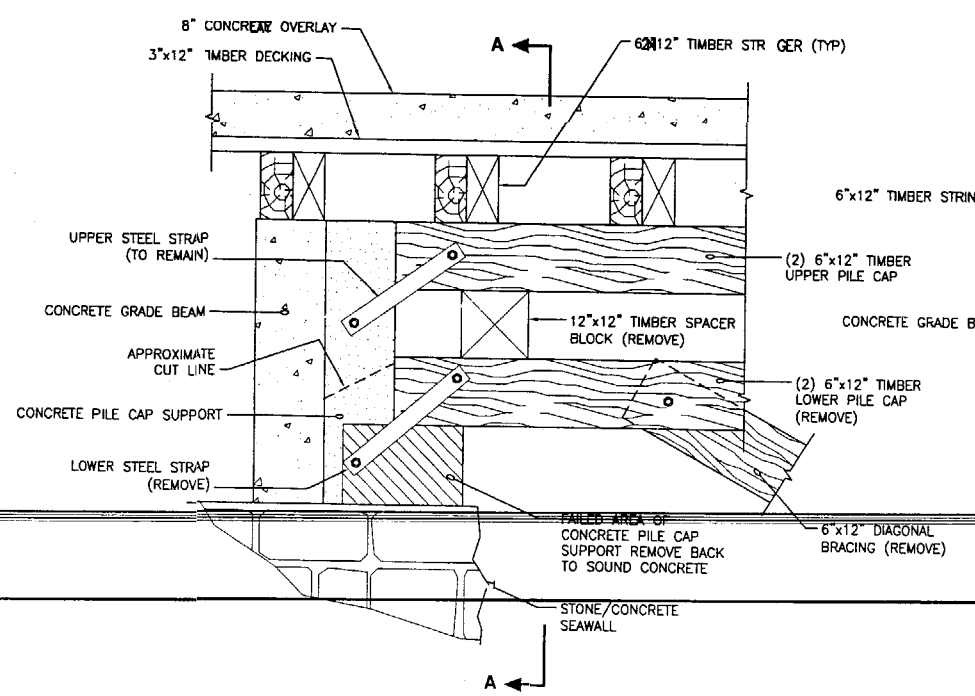

EXISTING ELEVATION

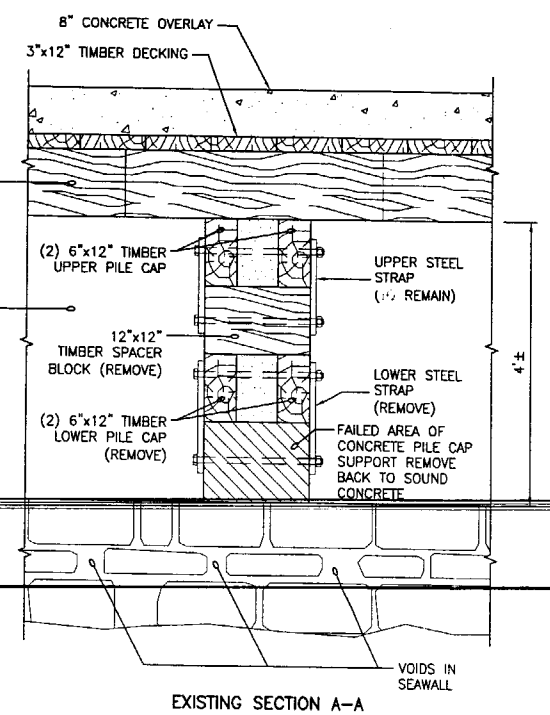

EXISTING SECTION A–A

BENT 23A PILE CAP SUPPORT REPAIR DETAILS

SCALE: 3/4"=1'-0"

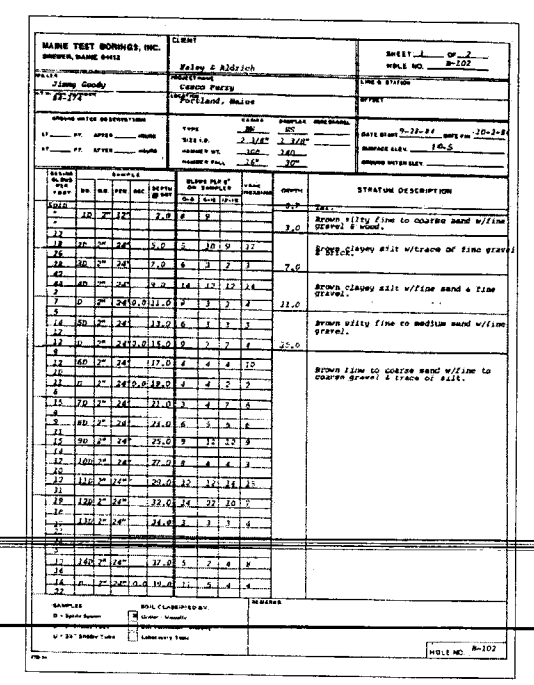
MAINE TEST BORINGS, INC.
SHEET 1 OF 2
HOLE NO. B-102
Jimmy Goody
Casco Ferry
Portland, Maine
Boring started 9-23-94 Boring ended 10-2-94
Surface elev. 14.6
Groundwater elev.
Type B
Size I.D. 3 1/8"
Hammer wt. 140
Hammer fall 24"
Sampler 3 1/8"
Sampler 300
Samples: D = Split Spoon; U = 3" Shelby Tube
Drill Cuttings Retained By: W = Water; T = Tricone; R = Rock Roller; C = Chisel; L = Laboratory Tube
Stratum Description
Brown, silty fine to coarse sand w/fine gravel & wood.
Brown, clayey silt w/trace of fine gravel & sand.
Brown, clayey silt w/fine sand & fine gravel.
Brown silty fine to medium sand w/fine gravel.
Brown fine to coarse sand w/fine to coarse gravel & trace of silt.
HOLE NO. B-102

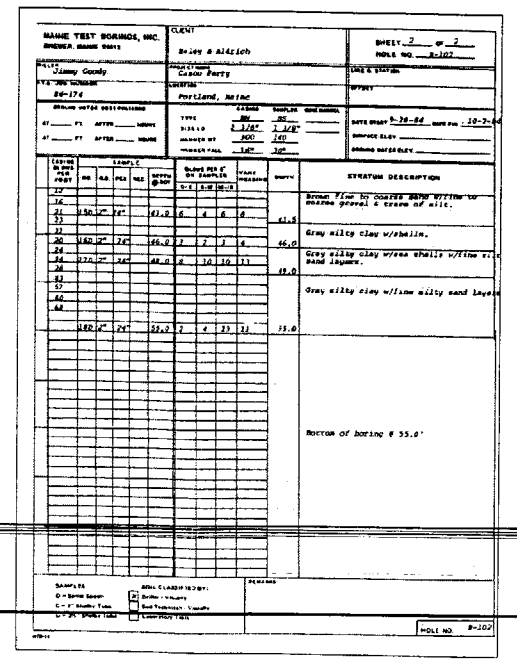
MAINE TEST BORINGS, INC.
SHEET 2 OF 2
HOLE NO. B-102
Jimmy Goody
Casco Ferry
Portland, Maine
Boring started 9-28-94 Boring ended 10-2-94
Type B
Size I.D. 3 1/8"
Hammer wt. 300
Hammer fall 140
Sampler 3 1/8"
Sampler 300
Samples: D = Split Spoon; U = 3" Shelby Tube
Drill Cuttings Retained By: W = Water; T = Tricone; R = Rock Roller; C = Chisel; L = Laboratory Tube
Stratum Description
Brown fine to coarse sand w/fine to coarse gravel & trace of silt.
Gray silty clay w/shells.
Gray silty clay w/rare shells w/fine to coarse sand layers.
Gray silty clay w/fine silty sand layers.
Bottom of boring @ 55.0'
HOLE NO. B-102

NOTE:
BORING 102 (B102) LOCATED INSHORE OF STONE SEAWALL AT BENT 22

CHILDS ENGINEERING CORPORATION
BOX 333 MEDFIELD, MASSACHUSETTS 02052 USA
Phone: (508) 359-8945 Fax: (508) 359-2751
E-mail: mail@childseng.com

STATE OF MAINE
DEPARTMENT OF TRANSPORTATION

PROJECT NUMBER 009215.00

PIN 009215.00

	BY	DATE
PROJ. MANAGER PAUL POTTLE		
DESIGN-DETAILER	TCG	2/09/06
DESIGN-REVIEWER	RGF	
DESIGN-QA (FAILED)		
REVISIONS 2		
REVISIONS 3		
REVISIONS 4		
FIELD CHANGES		

SIGNATURE
P.E. NUMBER
DATE

CASCO BAY ISLAND TRANSIT
DISTRICT IMPROVEMENTS GATE 4

EXISTING/DEMOLITION PLAN AND ELEVATION

M-01

1 OF 4

Filename: H:\job #\190905 Casco Bay CBITS Improvements\Gate No.4 190905-01.dwg, Feb 10 2006- 1:41pm

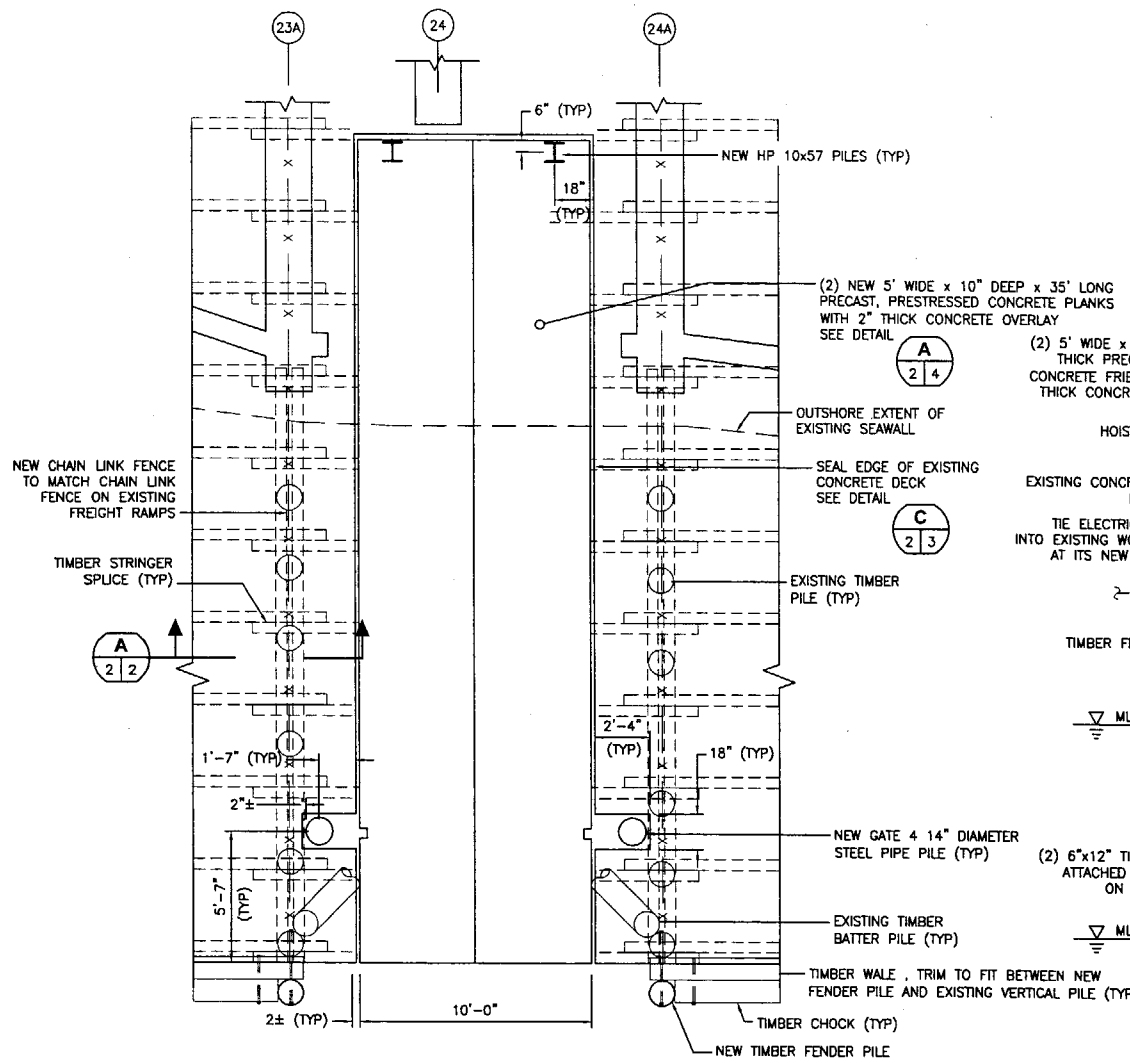

PROPOSED GATE 4 PLAN

SCALE: 1/4"=1'-0"

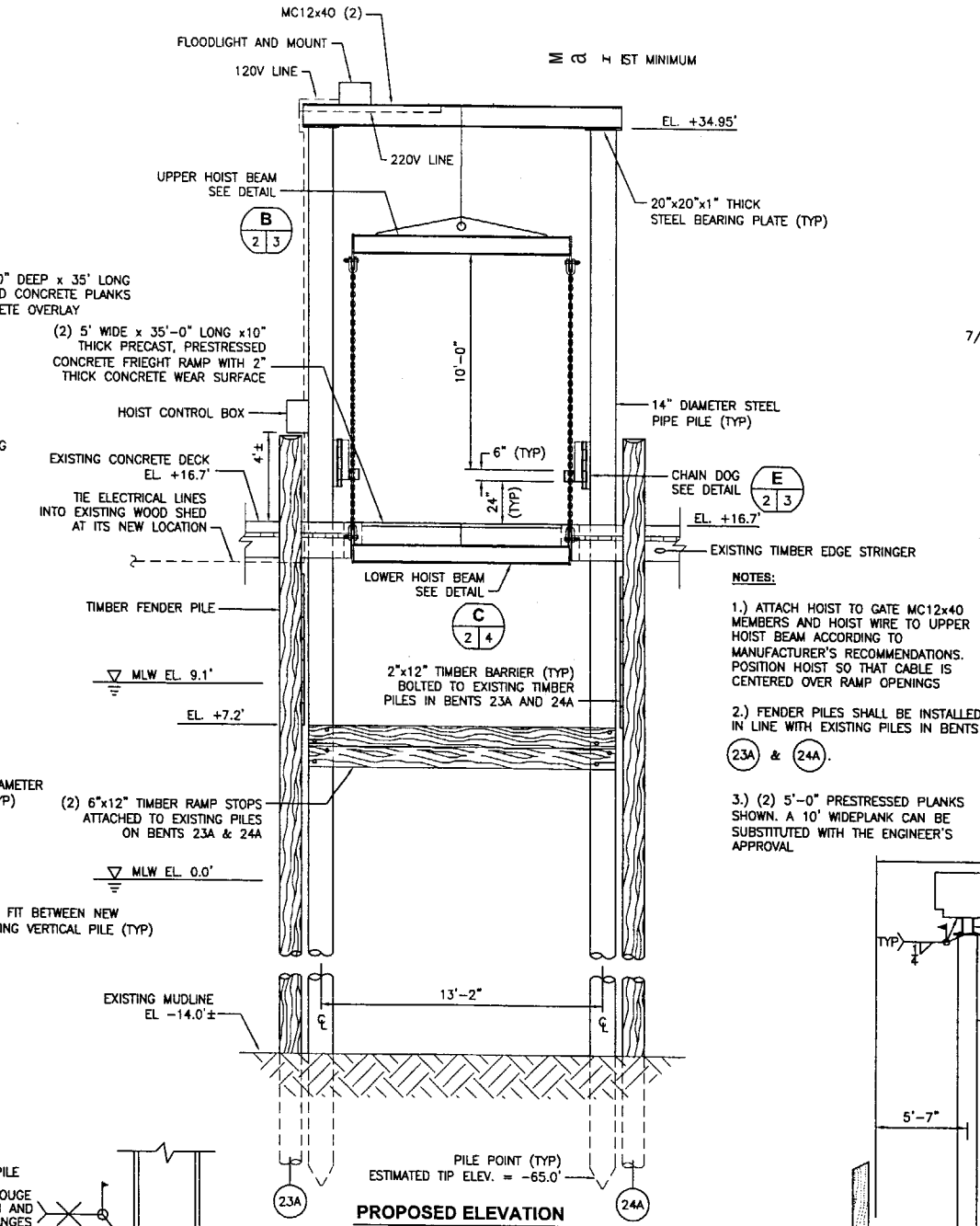

PROPOSED ELEVATION

SCALE: 1/4"=1'-0"

NOTES:

1.) ATTACH HOIST TO GATE MC12x40 MEMBERS AND HOIST WIRE TO UPPER HOIST BEAM ACCORDING TO MANUFACTURER'S RECOMMENDATIONS. POSITION HOIST SO THAT CABLE IS CENTERED OVER RAMP OPENINGS

2.) FENDER PILES SHALL BE INSTALLED IN LINE WITH EXISTING PILES IN BENTS 23A & 24A.

3.) (2) 5'-0" PRESTRESSED PLANKS SHOWN. A 10' WIDEPLANK CAN BE SUBSTITUTED WITH THE ENGINEER'S APPROVAL

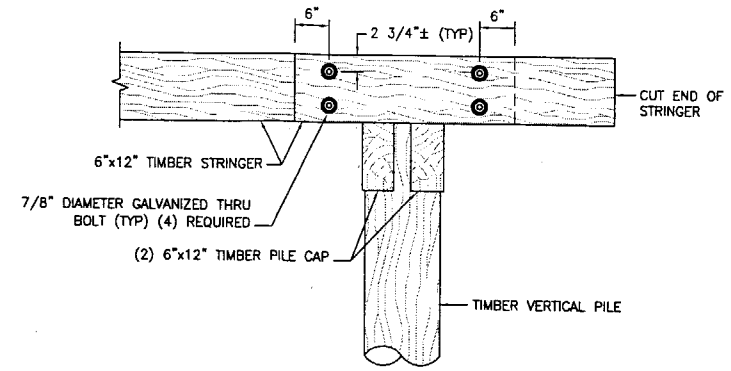

A 2|2 TIMBER STRINGER SPLICE DETAIL

SCALE: 3/4"=1'-0"

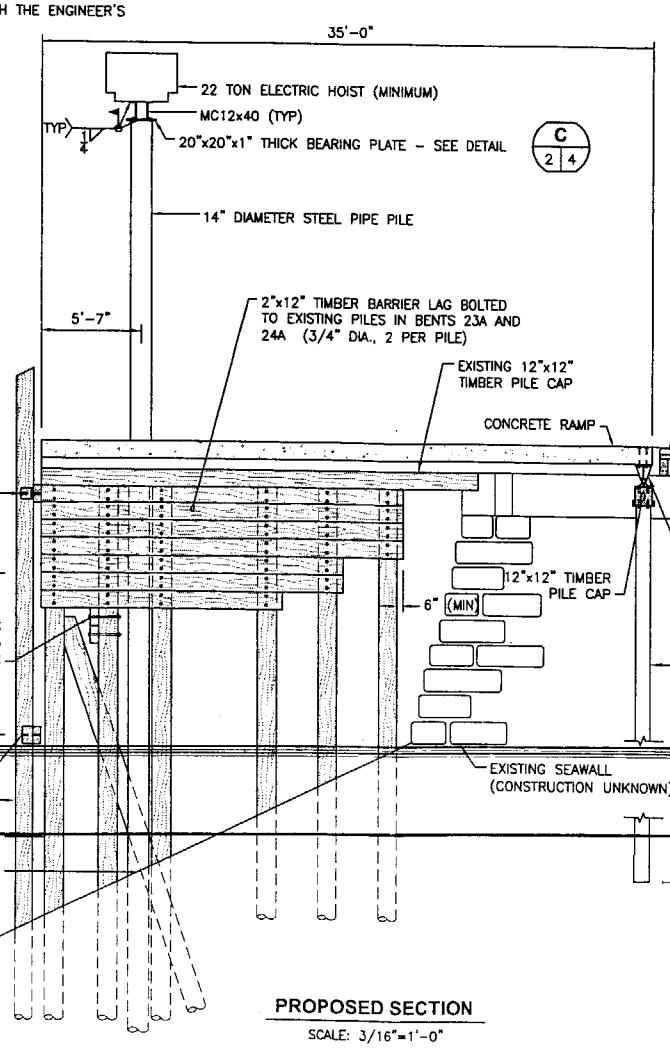

PROPOSED SECTION

SCALE: 3/16"=1'-0"

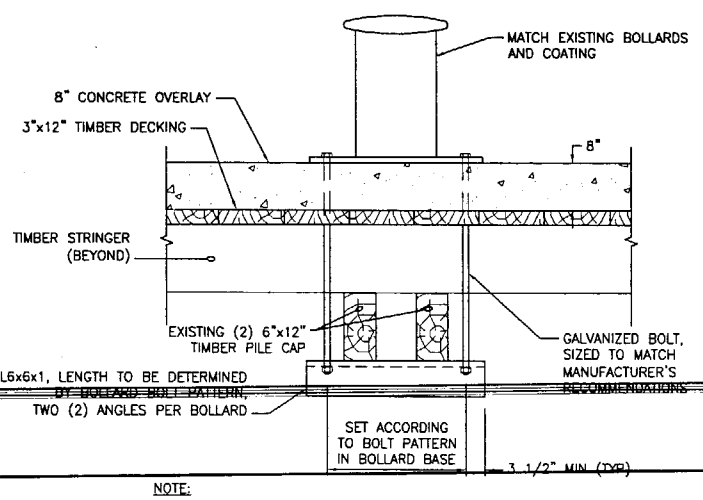

NOTE:

1.) NEW BOLLARD SHALL MATCH EXISTING BOLLARD @ BENT 23A.

2.) INSTALL NEW BOLLARD AS SHOWN @ BENTS 24A AND 23.

BOLLARD CONNECTION DETAIL

SCALE: 3/4"=1'-0"

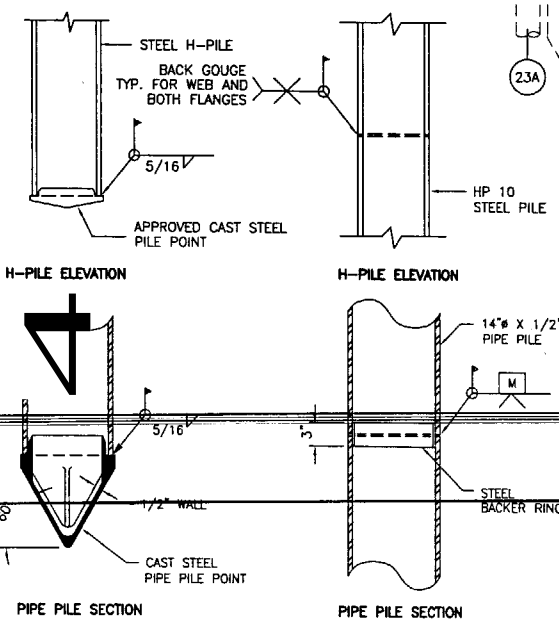

PILE POINT DETAILS

SCALE: 3/4"=1'-0"

PILE SPLICE DETAILS

SCALE: 3/4"=1'-0"

CHILDS ENGINEERING CORPORATION
BOX 333 MEDFIELD, MASSACHUSETTS 02052 U.S.A.
Phone: (508) 359-8945 Fax: (508) 359-2751
E-mail: mail@childseng.com

		BY	DATE
PROJ MANAGER	PAUL POTTLE		
DESIGN-DETAILED		TEG	2/09/06
CHECKED-REVIEWED		RGB	
DESIGN2-DETAILED2			
DESIGN3-DETAILED3			
REVISIONS 1			
REVISIONS 2			
REVISIONS 3			
REVISIONS 4			
FIELD CHANGES			

SIGNATURE

P.E. NUMBER

DATE

STATE OF MAINE
DEPARTMENT OF TRANSPORTATION

PROJECT NUMBER 009215.00

PIN 009215.00

CASCO BAY ISLAND TRANSIT
DISTRICT IMPROVEMENTS GATE 4

PROPOSED PILE PLAN
ELEVATION, SECTION AND DETAIL

M-02

2 OF 4

Filename: H:\job #\190905 Casco Bay CBITD Improvements\Gate No.4\190905-02.dwg, Feb 10, 2006 - 1:41pm

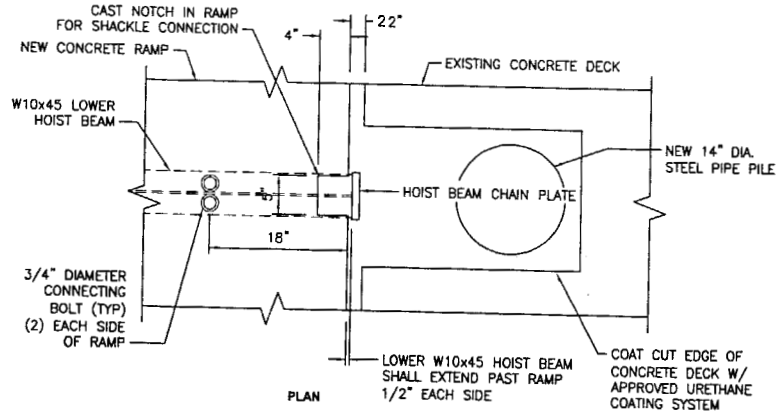

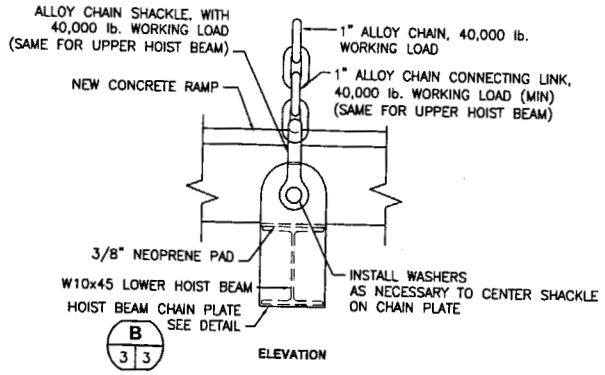

C 2|3 LOWER HOIST BEAM DETAIL
SCALE: 1"=1'-0"

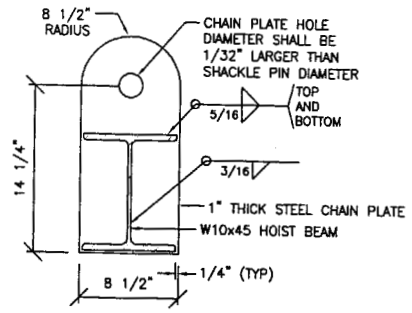

B 3|3 HOIST BEAM CHAIN PLATE DETAIL
SCALE: 1 1/2"=1'-0"

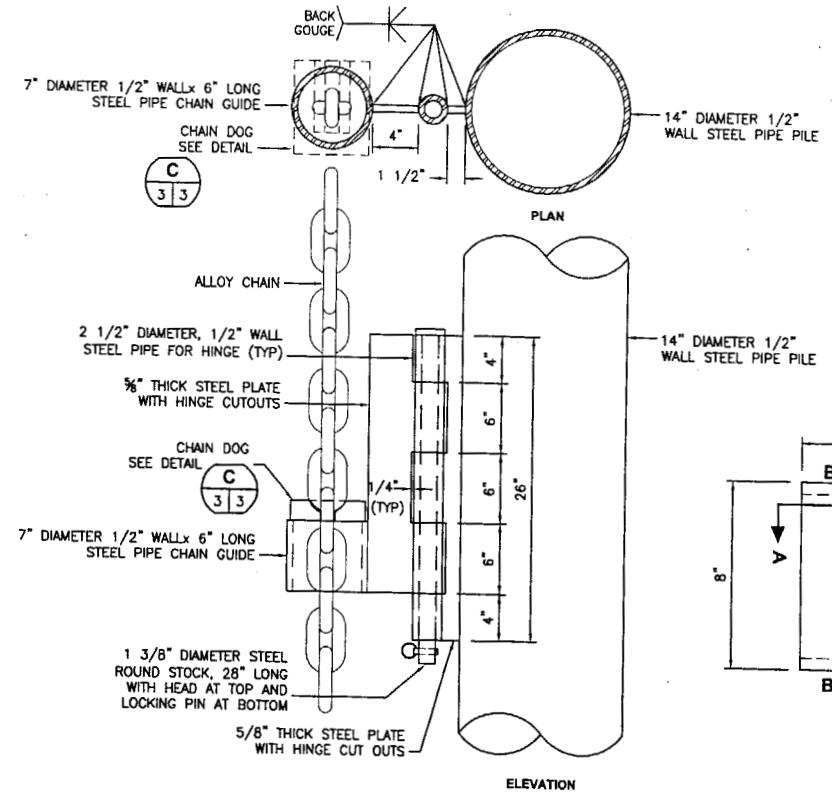

E 2|3 CHAIN GUIDE DETAIL
SCALE: 1 1/2"=1'-0"

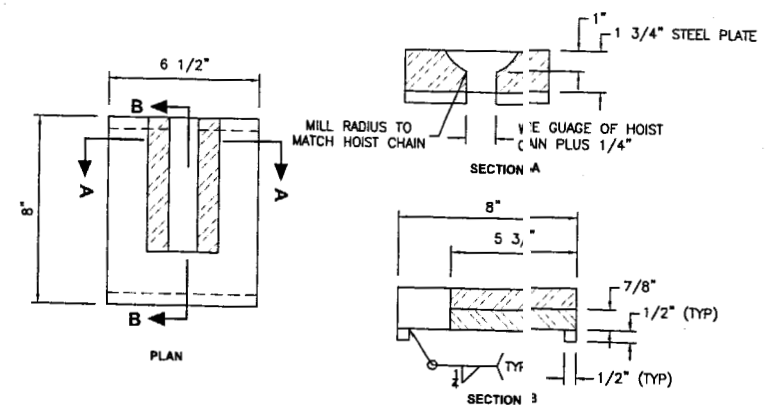

C 3|3 CHAIN DOG DETAIL
SCALE: 3"=1'-0"

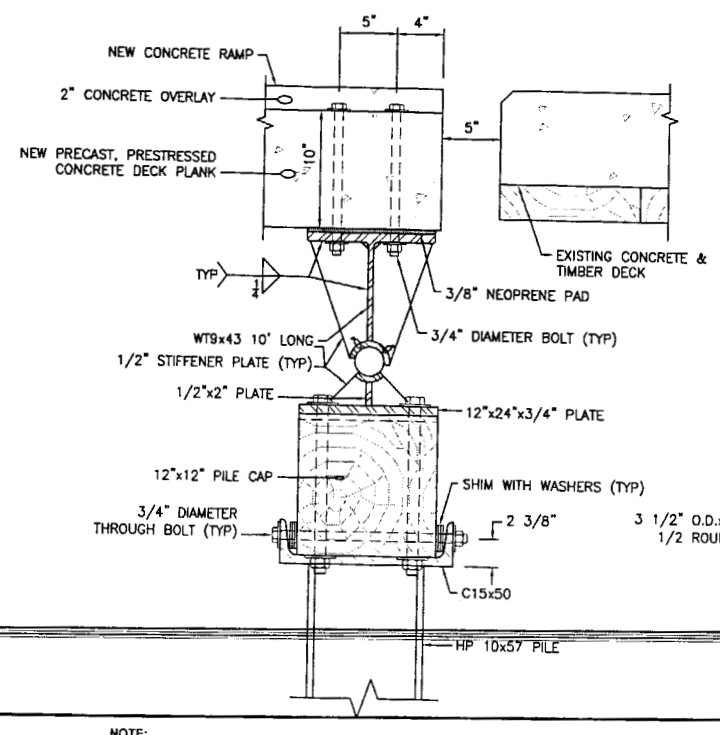

NOTE:
1" DIAMETER BOLTS CONNECTING HINGE SECTION TO PILE CAP NOT SHOWN FOR CLARITY

A 2|3 RAMP HINGE DETAILS
SCALE: 1 1/2"=1'-0"

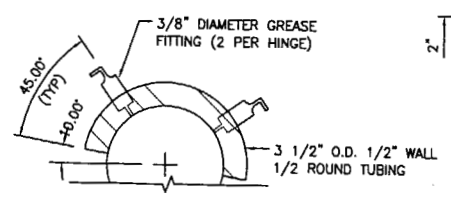

GREASE FITTING DETAIL
N.T.S.

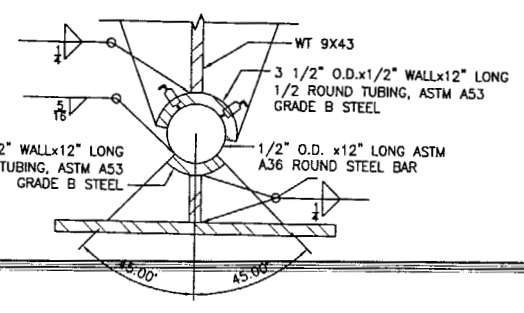

RAMP HINGE FABRICATION DETAIL
N.T.S.

NOTE:
ALL HARDWARE SHALL BE HOT-DIPP GALVANIZED

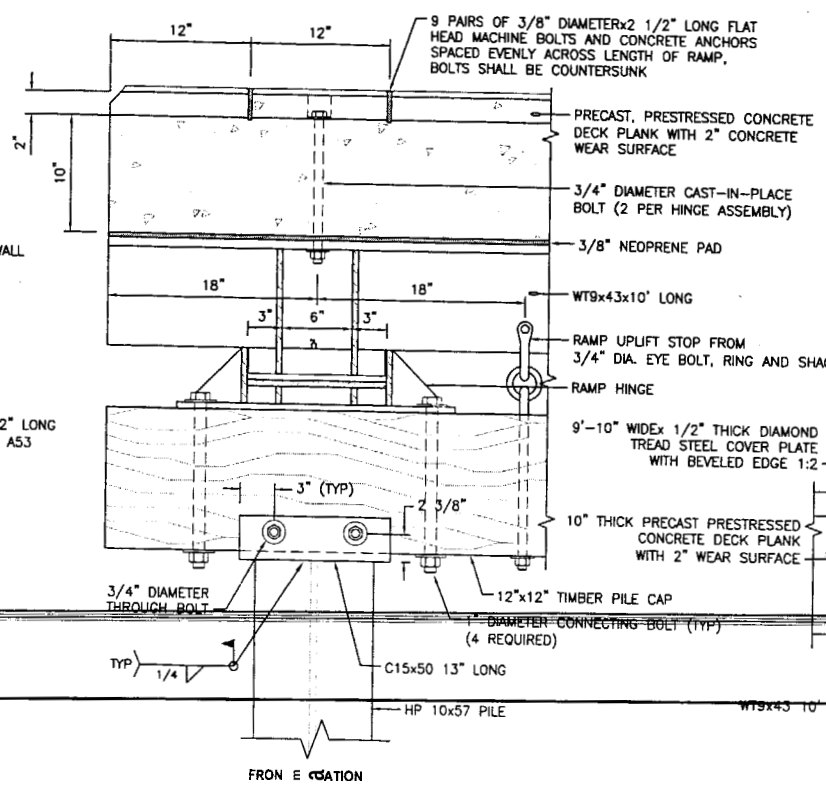

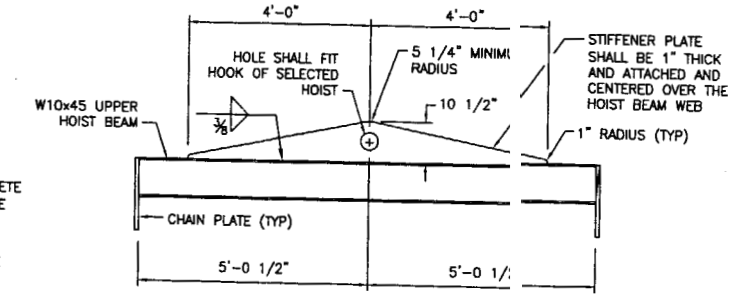

B 2|3 UPPER HOIST BEAM DETAIL
SCALE: 1/2"=1'-0"

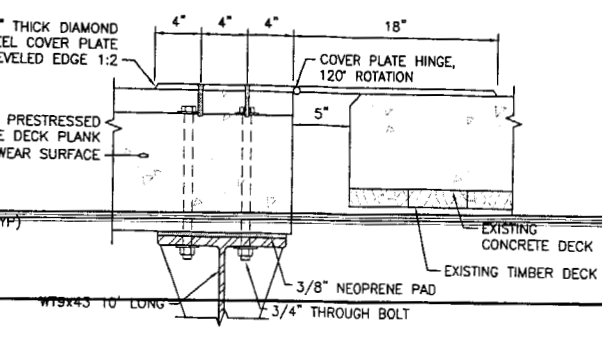

CHILDS ENGINEERING CORPORATION
BOX 333 MEDFIELD, MASSACHUSETTS 02052 U.S.A.
Phone: (508) 359-8945 Fax: (508) 359-2751
E-mail: mail@childseng.com

STATE OF MAINE
DEPARTMENT OF TRANSPORTATION
PROJECT NUMBER 009215.00
PIN 009215.00

	SIGNATURE	DATE
P.E. NUMBER		

	BY	DATE
PROJ MANAGER PAUL POTTLE		
DESIGN-DETAILED	TEQ	2/09/06
CHECKED-REVIEWED	RGF	
DESIGN2-DETAILED2	JRS	
DESIGN3-DETAILED3		
REVISIONS 1		
REVISIONS 2		
REVISIONS 3		
REVISIONS 4		
FIELD CHANGES		

CASCO BAY ISLAND TRANSIT
DISTRIC IMPROVEMENTS GATE 4

PROPOSED DETAILS

M-03

Filename: H:\job #\190905 Casco Bay CBITD Improvements\Gate No.4\190905-03.dwg, Feb 10, 2006 - 1:42pm

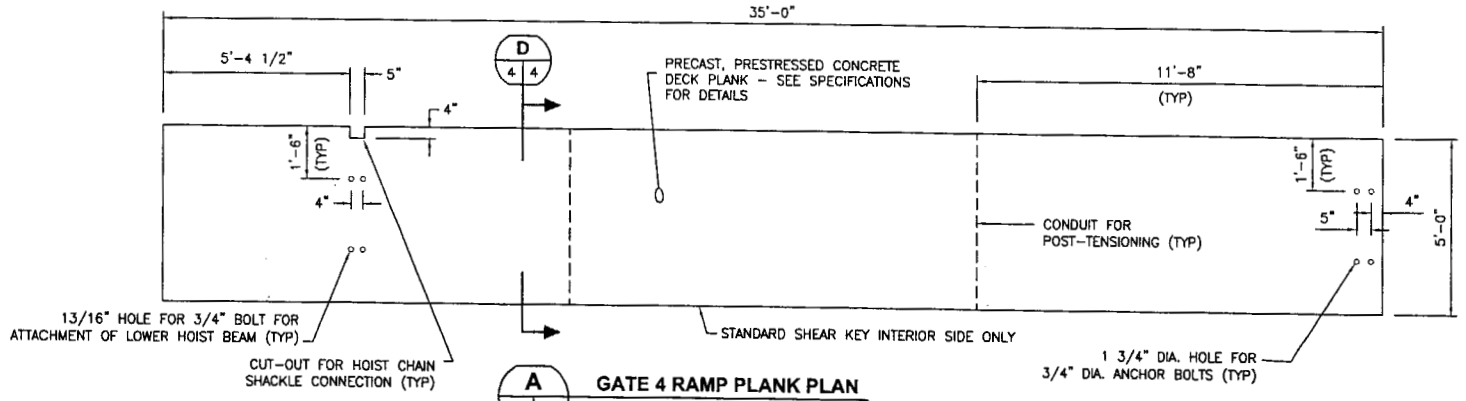

A 2 4 **GATE 4 RAMP PLANK PLAN**

SCALE: 3/8"=1'-0"

NOTES

1.) FINISHED TOPSIDE SURFACE OF PLANKS SHALL BE SCARIFIED 1/4" DEEP.

2.) CONTRACTOR SHALL SELECT A POST-TENSIONING SYSTEM AND COORDINATE WITH FABRICATOR TO ENSURE PROPER CONDUIT AND POST TENSIONING ANCHOR PLATES ARE INCLUDED IN PLANK DESIGN.

3.) TWO 5'-0" PLANKS ARE SHOWN. ONE 10' WIDE MAY BE SUBSTITUTED WITH ENGINEER'S APPROVAL

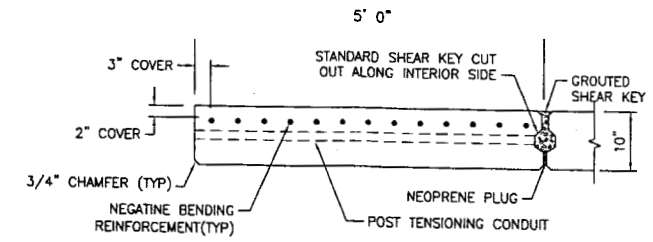

NOTES:

1.) DECK PLANKS SHALL BE PRECAST, PRESTRESSED CONCRETE, SEE SPECIFICATIONS FOR DETAILS.

2.) PLANKS SHALL BE DESIGNED FOR THE FOLLOWING LIVE LOADING CONDITIONS:
A) 200psf
B) FULLY LOADED 2 1/2 TON FORKLIFT WITH 90% OF SELF AND LOAD WEIGHT ON FRONT AXLE.

3.) ONLY TOP (NEGATIVE) STEEL SHOWN HERE.

D 4 4 **GATE 4 RAMP PLANK SECTION**

SCALE: 3/4"=1'-0"

CHILDS ENGINEERING CORPORATION
BOX 333 MEDFIELD, MASSACHUSETTS 02052 U.S.A.
Phone: (508) 359-8945 Fax: (508) 359-2751
E-mail: mail@childseng.com
CHILDS ENGINEERING CORPORATION

STATE OF MAINE
DEPARTMENT OF TRANSPORTATION

PROJECT NUMBER 009215.00

PIN 009215.00

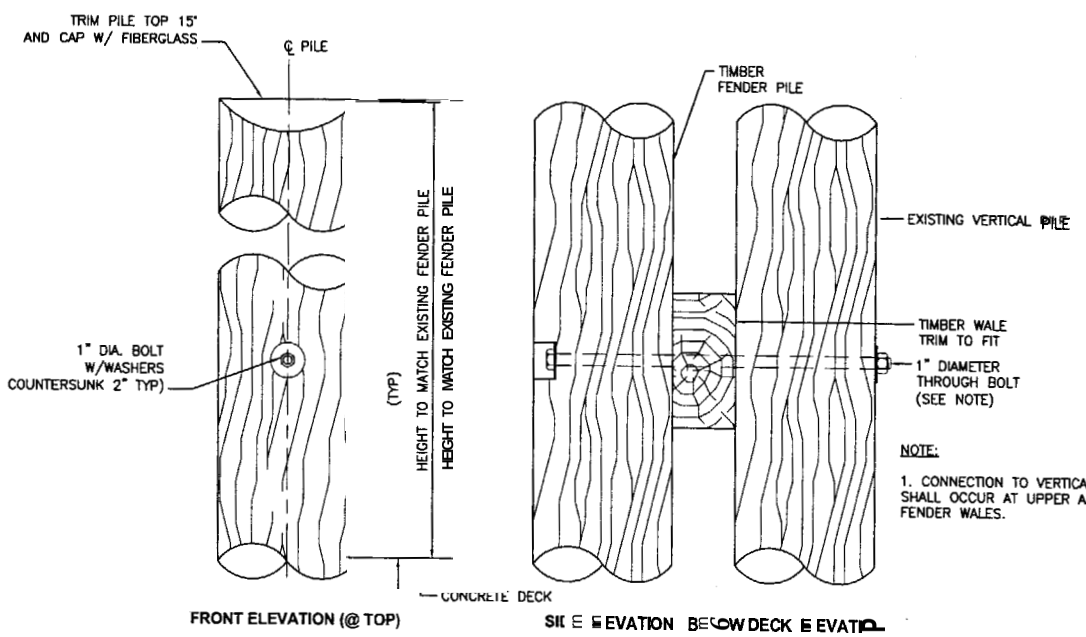

B 2 4 **FENDER PILE CONNECTION DETAILS**

SCALE: 1 1/2"=1'-0"

NOTE:

1. CONNECTION TO VERTICAL PILES SHALL OCCUR AT UPPER AND LOWER FENDER WALES.

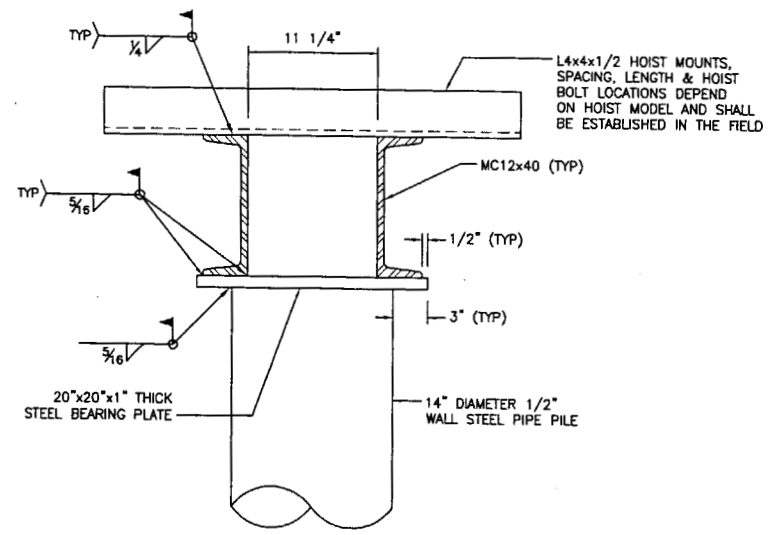

C 2 4 **MC12x40 TO PIPE PILE CONNECTION DETAIL**

SCALE: 1 1/2"=1'-0"

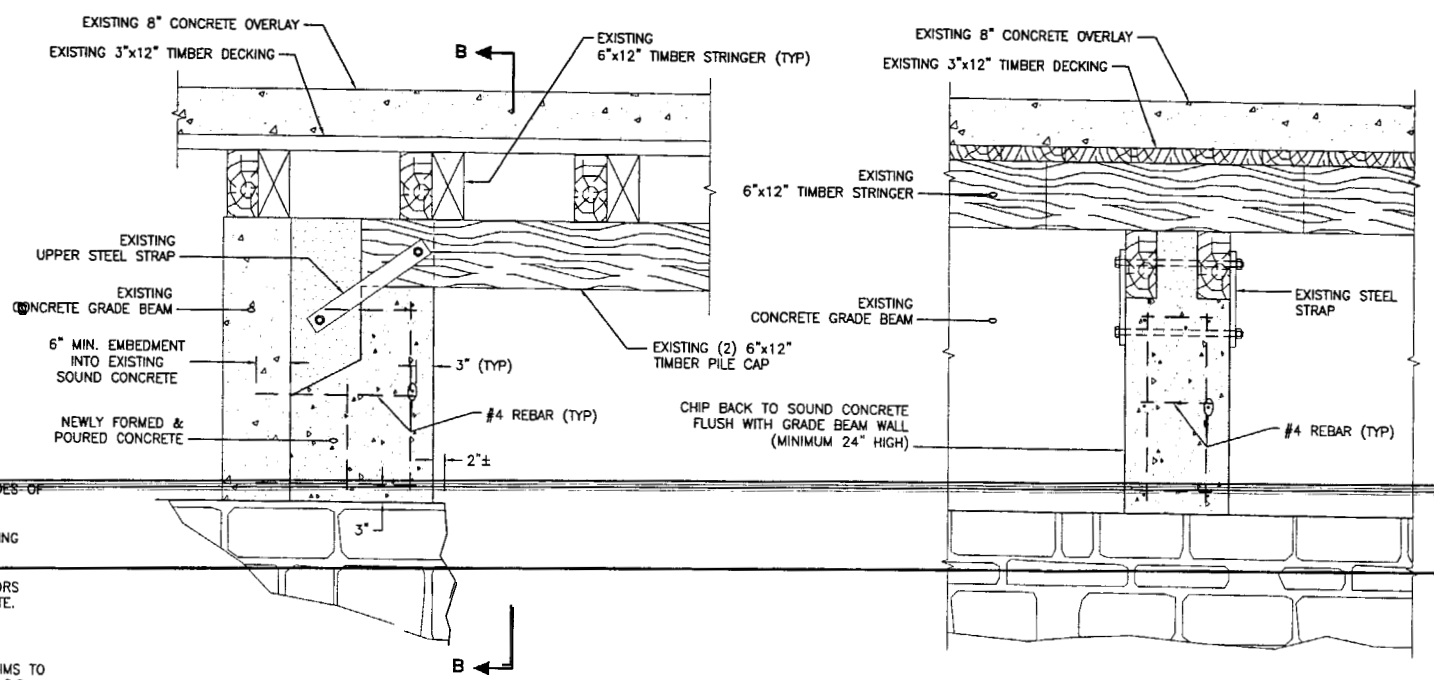

PROPOSED ELEVATION

PROPOSED SECTION B-B

BENT 23A PILE CAP SUPPORT REPAIR DETAILS

SCALE: 3/4"=1'-0"

NOTES:

1.) MAINTAIN 3" MINIMUM COVERAGE ON ALL SIDES OF NEW PLACED REINFORCING STEEL.

2.) #4 REBAR SHALL BE ANCHORED INTO EXISTING CONCRETE WITH GROUT.

3.) 3 LEVELS OF HORIZONTAL #4 REBAR ANCHORS SHALL BE EVENLY SPACED IN NEW CONCRETE.

4.) EDGES SHALL BE CHAMFERED 3/4".

5.) USE TREATED TIMBER OR UHMW PLASTIC SHIMS TO ESTABLISH BEARING CONTACT, SECURE WITH S.S. NAILS.

6.) RINSE SOUND CONCRETE WITH CHLOR-RID SOLUABLE SALT REMOVER OR EQUAL PRIOR TO PLACING NEW CONCRETE.

PROJ. MANAGER PAUL POTTLE			
1 DESIGN-DETAILED (PRELIMINARY)	TKO	2/23/06	
2 DESIGN-REVIEWED (PRELIMINARY)	AGE		SIGNATURE
CHECKED-REVIEWED (FINAL)	AGE		
3 DESIGN3-DETAILED (FINAL)	JWS		P.E. NUMBER
4 REVISIONS 1			
5 REVISIONS 2			
6 REVISIONS 3			DATE
7 REVISIONS 4			
8 FIELD CHANGES			

CASCO BAY ISLAND TRANSIT DISTRICT IMPROVEMENTS GATE 4

PROPOSED DETAILS

M 04

Filename: H:\job #\190905 Casco Bay CBITD improvements\Gate No.4\190905-04.dwg, Feb 10, 2006 - 1:42pm

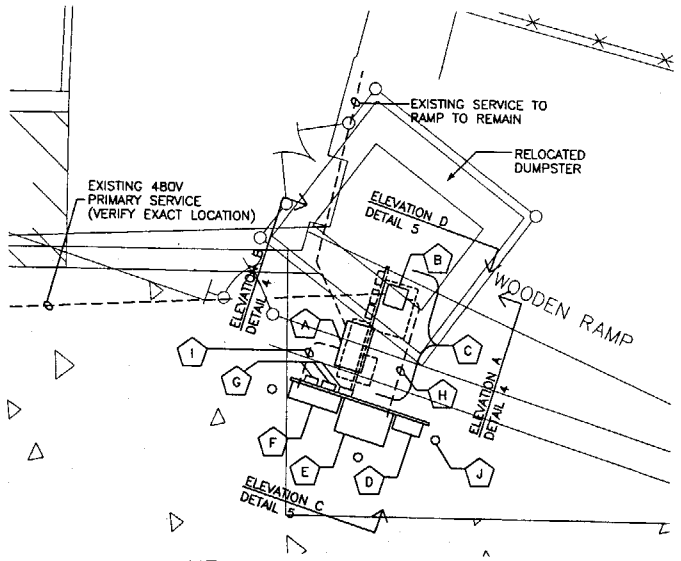

A NEW 30" x 17" SPLICE BOX SEE DETAIL
B NEW 12" x 12" SPLICE BOX SEE DETAIL
C EXISTING EQUIPMENT SEE ELEVATION
D EXISTING RELOCATED DISCONNECT SWITCH
E EXISTING RELOCATED TRANSFORMER
F NEW 120/208V, 3PH, 600A PANELBOARD TO REPLACE EXISTING
G EXISTING RELOCATED ALARMS
H EXTENDED 480V PRIMARY SERVICE
I EXTENDED 3-4" BRANCH CIRCUITS
J 6" DIAMETER STL. PIPE BOLLARD FILLED W/CONCRETE (TYP OF 3)

3 NEW DUMPSTER LOCATION DETAIL PLAN
1" = 5'-0"

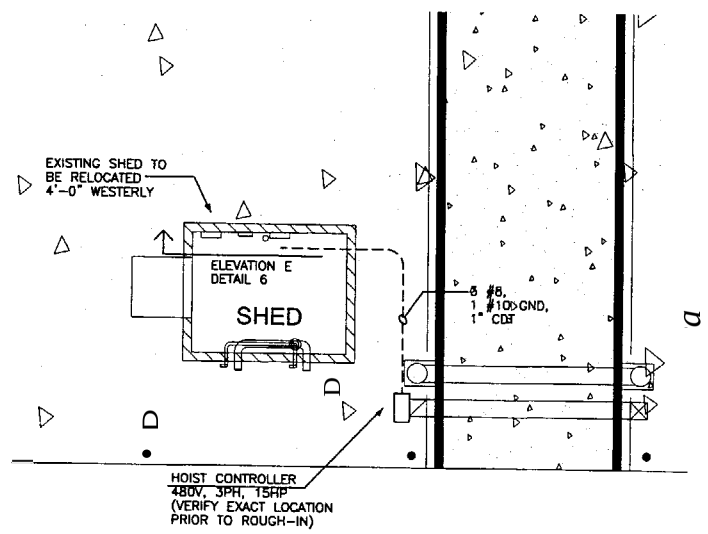

2 NEW SHED LOCATION DETAIL PLAN
1" = 5'-0"

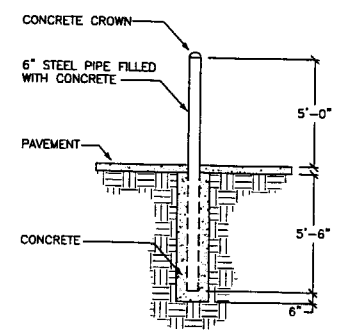

8 BOLLARD DETAIL
NOTE TO SCALE

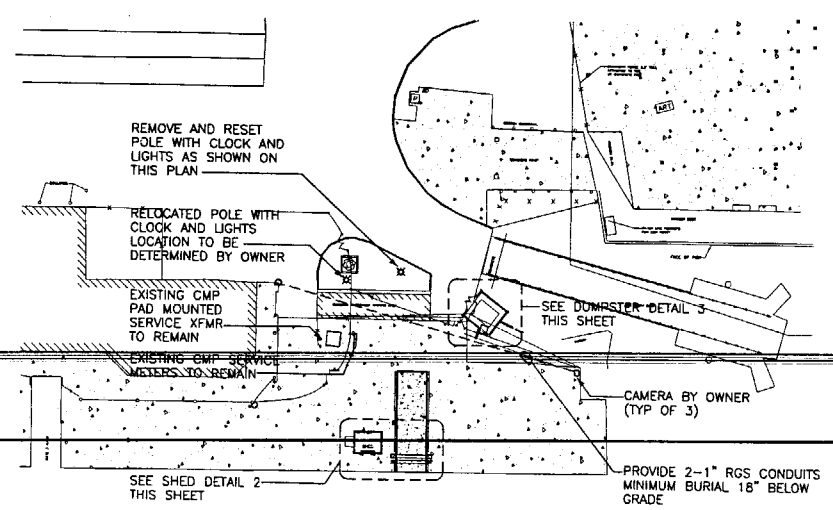

1 ELECTRICAL SITE PLAN
1 " =30'-0"

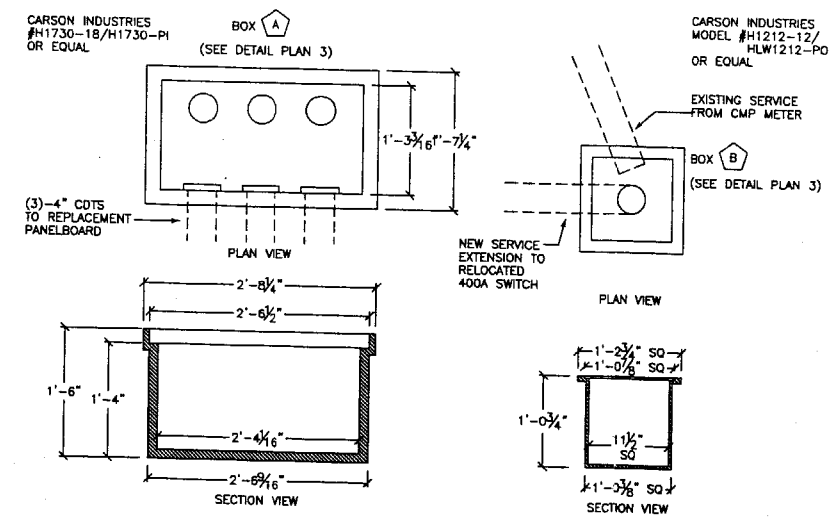

7 ELECTRICAL SPLICE BOXES
NOT TO SCALE

BOXES SHOWN ARE POLYMER CONCRETE.
PRECAST CONCRETE BOXES IN EQUIVALENT SIZES WILL ALSO BE ACCEPTED.

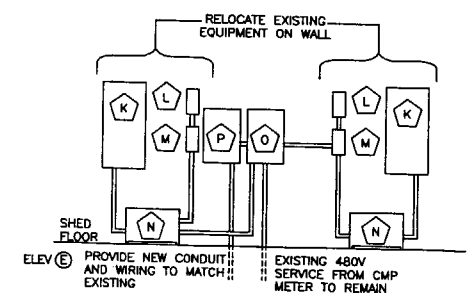

K 120/240V, 1PH, 3W PANELBOARD
L 30A/3P 480V FUSED SWITCH
M 30A/3P 480V FUSED SWITCH
N 15 KVA 240:480V TRANSFORMER
O EXISTING 600A/3P 480V FUSED SWITCH TO REMAIN
P PROVIDE A 40A/3P CIRCUIT BREAKER IN A NEMA 1 ENCLOSURE FOR SERVICE TO THE NEW HOIST. CONNECT THE LINE SIDE TO THE EXISTING FUSED SWITCH LOAD-SIDE TERMINALS WITH 3 #8, 1 #10 GND, IN A 1" CDT. PROVIDE A FEEDER TO THE NEW HOIST CONSISTING OF 3 #8, 1 #10 GND, IN A 1" CDT.

NOTE:
CONFIRM THAT THE EXISTING SERVICE GROUND MEETS NEC ARTICLE 250. OTHERWISE, PROVIDE A #2 BARE COPPER SERVICE GROUND FROM THE SERVICE EQUIP TO A NEW 5/8" DIA BY 8'-0" LONG COPPER CLAD GROUND ROD.

6 EXISTING SHED EQUIPMENT
NOT TO SCALE

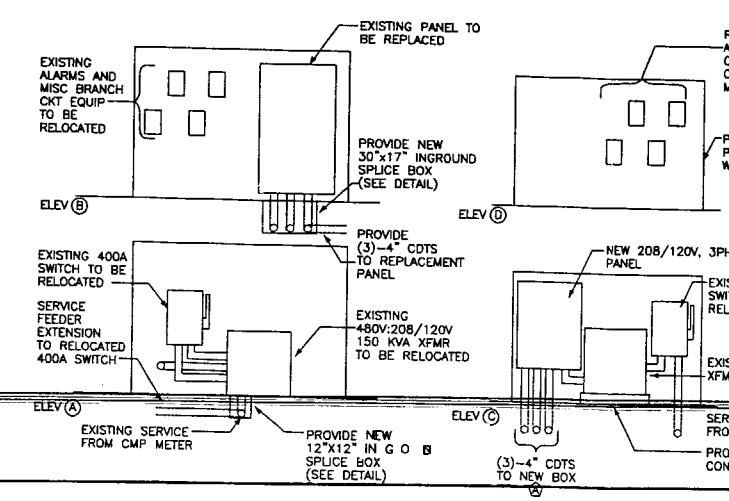

NEW PANEL
120/208V, 3PH, 4W
NEMA 4 STAINLESS STL ENCLOSURE
600A BUS
400A MCB
BRANCH C.B.'S:
(3) 20A/1P
(3) 15A/3P
(1) 20A/3P
(2) 30A/2P
(1) 50A/2P

4 EXISTING EQUIPMENT ELEVATION
NOT TO SCALE

5 RELOCATED EQUIPMENT ELEVATION
NOT TO SCALE

PROVIDE NEW SERVICE GROUND CONSISTING OF A #1/0 BARE COPPER GROUND AND A 5/8" DIA X 8'-0" LONG COPPER CLAD GROUND ROD.

Bartlett Design
LIGHTING & ELECTRICAL ENGINEERING
642 WASHINGTON STREET, BATH, ME 04530
TEL. (207) 443-5447 FAX (207) 443-5060

STATE OF MAINE
DEPARTMENT OF TRANSPORTATION
PROJECT NUMBER 009215.00
PIN 009215.00

	BY	DATE
PROJ. MANAGER PAUL POTTLE		
DESIGN-DETAILED	J.C.	01/29/08
CHECKED-REVIEWED	LEB	
DESIGN2-DETAILED2	LEB	
DESIGN3-DETAILED3	LEB	
REVISIONS 1		
REVISIONS 2		
REVISIONS 3		
REVISIONS 4		
FIELD CHANGES		

SIGNATURE
P.E. NUMBER
DATE

CASCO BAY ISLAND TRANSIT DISTRICT
IMPROVEMENTS - GATE 4

GATE 4
PLANS & DETAILS

E100

1 OF 1

Filename: