THE FILTER SAND SHALL BE TESTED AT A SOIL TESTING LAB AND:
- MEET ALL OF THE BELOW GRADATION EXCEPT THAT IT SHALL HAVE BETWEEN 8% AND 10% PASSING THE #200 SIEVE*.
- HAVE MINIMAL CLAY CONTENT.
- BE FREE OF STONES, STUMPS, ROOTS OR OTHER OBJECTS GREATER THAN 2".

SOIL FOR 12" LOAMY COARSE SAND LAYER (MEDOT #703.01)

SIEVE SIZE	% BY WEIGHT
3/8"	100
#4	95–100
#8	80–100
#16	50–85
#30	25–60
#50	10–30
#100	2–10
#200	0–5*

CLEAN GRAVEL
MEDOT SPECIFICATIONS FOR UNDERDRAINS (MEDOT #703.22)

SIEVE SIZE	% BY WEIGHT
UNDERDRAIN TYPE C	
1"	100
3/4"	90–100
3/8"	0–75
#4	0–25
#10	0–5

CONSTRUCTION OVERSIGHT:
FIELD OBSERVATION OF THE FILTER BASIN SHALL BE PROVIDED FOR EACH PHASE OF CONSTRUCTION BY THE DESIGN ENGINEER WITH REQUIRED REPORTING TO THE DEP. AT A MINIMUM, CONTRACTOR SHALL NOTIFY ARCHITECT ONE WEEK PRIOR TO THE FOLLOWING:
- AFTER PRELIMINARY CONSTRUCTION OF THE FILTER GRADES AND ONCE THE UNDERDRAIN PIPES ARE INSTALLED BUT NOT BACKFILLED;
- AFTER THE DRAINAGE LAYER IS CONSTRUCTED AND PRIOR TO THE INSTALLATION OF THE FILTER MEDIA;
- AFTER THE FILTER MEDIA HAS BEEN INSTALLED AND SEEDED;
- AFTER ONE YEAR TO INSPECT HEALTH OF THE VEGETATION AND MAKE CORRECTIONS; AND
- ALL MATERIAL USED FOR THE CONSTRUCTION OF THE FILTER BASIN WILL BE APPROVED BY THE DESIGN ENGINEER AFTER TESTS BY A CERTIFIED LABORATORY SHOW THAT THEY ARE PASSING DEP SPECIFICATIONS SHOWN ON THIS SHEET.

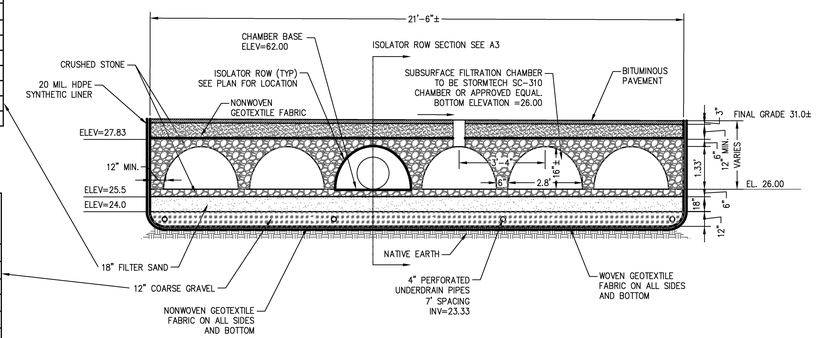

UNDERDRAIN SUBSURFACE SAND FILTER SECTION — B1
NOT TO SCALE

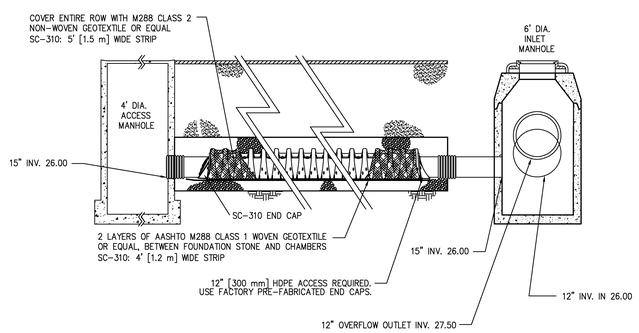

ISOLATOR ROWS 4 DETAIL — D6
NOT TO SCALE

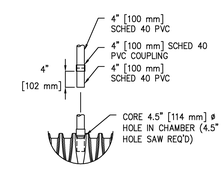

CONNECTION DETAIL
NTS

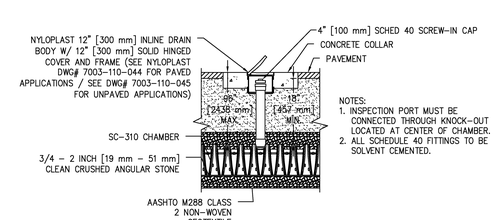

NOTES:
1. INSPECTION PORT MUST BE CONNECTED THROUGH KNOCK-OUT LOCATED AT CENTER OF CHAMBER.
2. ALL SCHEDULE 40 FITTINGS TO BE SOLVENT CEMENTED.

INSPECTION PORT DETAIL — A1
NOT TO SCALE

HARRIMAN
Architects + Engineers
46 Harriman Drive
Auburn, ME 04210
207.784.5100 tel
123 Middle Street
Portland, ME 04101
207.775.0053 tel
One Perimeter Road
Manchester, NH 03103
603.626.1242 tel
www.harriman.com

© 2012

STATE OF MAINE — FRANK L. CRABTREE No. 3993 — LICENSED PROFESSIONAL ENGINEER

Project Title
MARTIN'S POINT HEALTHCARE BUILDING #7 RENOVATION & ADDITION
PORTLAND, MAINE

HA Project No. 11588

Key Plan

NOTES:
1. SURVEY PREPARED BY OWEN HASKELL, INC., DATED FEB. 22, 2012.

Mark	Date	Description
	4–06–12	ISSUED FOR BID

Issue Dates

Drawing Status

Drawing Title
SITE DETAILS

PA / PE: FLC
Drawn By: PLS

Drawing Number
C50.2