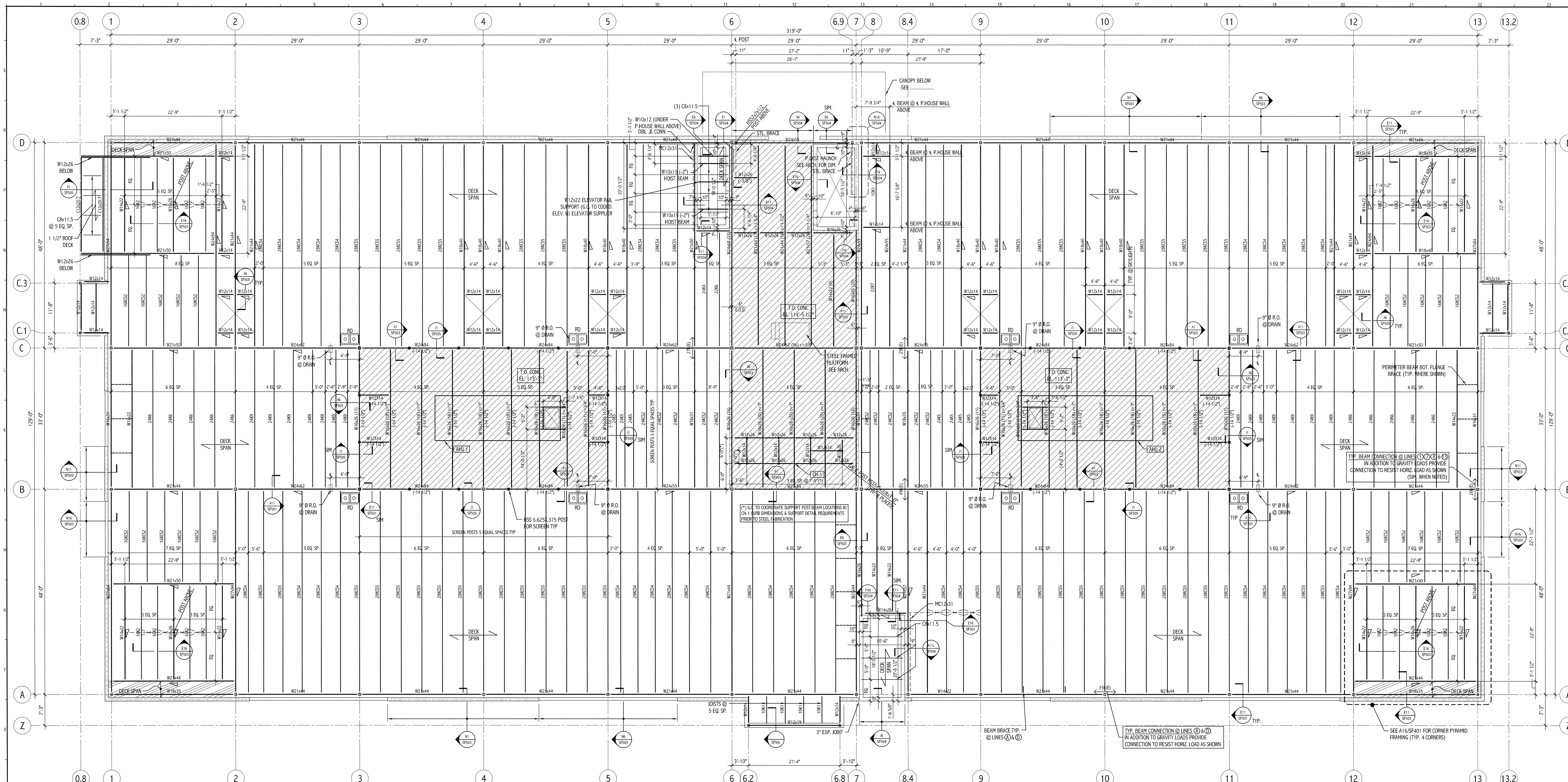

D1 ROOF LEVEL FRAMING PLAN

1/8" = 1'-0"

## NOTES:

1. FOR GENERAL NOTES SEE SG001
2. BOT. OF DECK EL. 114'-0" TYP. U.N.O.
T.O. STEEL BEAMS SUPPORTING JOISTS IS 2 1/2" LOWER THAN REFERENCED BOTTOM OF DECK.
T.O. CONC. EL. AS NOTED.

3a. INDICATES CONCRETE DECK. CONCRETE AREA ON 2VL20 GALV. COMPOSITE DECK. REINF. 6x6-W2xW2, TOTAL FLOOR DECK THICKNESS 5 1/2".

3b. THE CONCRETE DECK THICKNESS SHALL BE INCREASED IF REQUIRED TO COMPENSATE FOR BEAM DEFLECTION DURING CONCRETE POUR.

4. TYPICAL ROOF DECK: 1.5B18-GALV.
5. REACTIONS, INDICATED XXk, ARE PROVIDED AT END OF BEAMS, DESIGNED AS COMPOSITE W/ THE CONCRETE SLAB, FOR CONNECTION DESIGN. SEE SG001 FOR ADDITIONAL REQUIREMENTS.
6. NUMBERS IN BRACKETS SHOWN THUS [X] INDICATE THE REQUIRED NUMBER OF SHEAR CONNECTORS THAT SHALL BE FIELD WELDED TO THE BEAM TOP FLANGE. SEE SG001 FOR REQUIREMENTS.
7. "c=X"" DESIGNATES REQUIRED CAMBER AT MIDSPAN.
8. "RD" DESIGNATES ROOF DRAIN. COORDINATE EXACT LOCATION W/ARCHITECTUAL AND PLUMBING DRAWINGS. PROVIDE RECESSED SUMP PANS W/ANGLE FRAME. REFER TO N11/SF501 FOR TYPICAL DETAIL.

## MECHANICAL UNIT SCHEDULE:

| UNIT | WEIGHT (LBS) | UNIT SIZE |
|---|---|---|
| AHU-1 & 2 | 18,000 | 29.3'Lx10.9'Wx7.7'H |
| CH-1 | 12,500 | 22.3'Lx6.0'Wx8.0'H |

1. STRUCTURAL FRAMING WAS DESIGNED TO SUPPORT WEIGHT OF THE MECHANICAL UNITS AS LISTED BELOW.
2. G.C. SHALL COORDINATE SUPPORTING CURB DIMENSIONS AND LOCATIONS W/ MECHANICAL UNITS APPROVED SUBMITTAL BEFORE STEEL FABRICATION.
3. FINAL UNIT WEIGHTS, DIMENSIONS, LOCATIONS AND SUPPORT REQUIREMENTS (CURB, LEGS, ETC.) SHALL BE SUBMITTED TO PROJECT ENGINEER FOR REVIEW PRIOR TO UNIT INSTALLATION.
4. FRAMING MAY NEED TO BE REVISED OR REINFORCED IF UNIT WEIGHTS OR DIMENSIONS ARE CHANGED.
5. ALL UNITS ARE LOCATED ON CONCRETE DECK IN PENTHOUSE & ADJACENT ENCLOSURE AREA O.N.O.

## GENERAL NOTES:

1. SEE GI001 FOR PROJECT GENERAL NOTES.

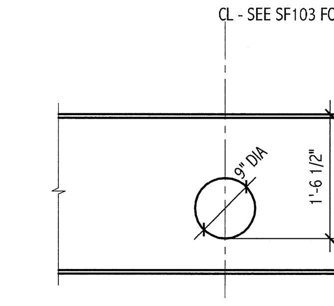


A15 ROOF BEAM OPENING DETAIL

3/4" = 1'-0"

SF103

| REV. | DESCRIPTION | DATE |
|---|---|---|
| 0 | - | 00-00-00 |

ISSUED FOR G.M.P. & PERMITTING
4-3-09

CURRENT ISSUE STATUS:

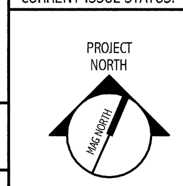



SMRT
ARCHITECTURE
ENGINEERING
PLANNING
INTERIOR DESIGN
COMMISSIONING
144 Fore Street/P.O. Box 618
Portland, Maine 04104
tel. (207) 772-3846
fax. (207) 772-1070
www.smrtinc.com


MARTIN'S POINT HEALTH CARE
MEDICAL OFFICE BUILDING
PORTLAND, MAINE

ROOF LEVEL
FRAMING PLAN

SHEET TITLE:

| | | | |
|---|---|---|---|
| SCALE: | AS NOTED | DATE: | |
| PROJECT MANAGER: | SLB | GRAPHIC SCALE: | 0" 1" |
| JOB CAP/DRAWN: | TCM/AFP | | |
| A/E OF RECORD: | JSW | SHEET No. | |
| SMRT CAD FILE: | SF103-08139 | SF103 | |
| PROJECT No. | 08139 | | |

©COPYRIGHT 2008 SMRT INC.

PROGRESS PRINT