GENERAL NOTE:
THIS PLAN DOES NOT DELETE ANY ITEMS REQUIRED BY THE CITY OF PORTLAND AND/OR THE MAINE DEP IN ANY AND ALL APPROVALS FOR THE MAINE YACHT CENTER PHASE 1 & 2. FOR ALL APPROVALS DATED BEFORE 12/1/03.
THESE ITEMS HAVE BEEN CARRIED IN THEIR ENTIRETY TO THIS MODIFIED SUBMITTAL.

ALL ITEMS MODIFIED BY THIS SUBMITTAL TO THE CITY OF PORTLAND ON 5/6/04 ARE THE DESIGN RESPONSIBILITY OF THE ENGINEER WHOSE STAMP IS AFFIXED TO THE DRAWING.

ITEMS MODIFIED ON THIS SHEET
1. NO CHANGES.

Temporary Erosion Control Measures

The following measures are planned as temporary erosion/sedimentation control measures during construction:

1. A crushed stone stabilized construction entrance shall be placed at the intersection of the site roadway and Kensington Street

2. Siltation fence shall be installed downstream of any disturbed areas to trap runoff borne sediments until the tributary disturbed area is revegetated. The silt fence shall be installed per the detail provided in the plan set and inspected immediately after each rainfall and at least daily during prolonged rainfall. Repairs shall be made if there are any signs of erosion or sedimentation below the fence line. If there are signs of undercutting at the center or the edges, or impounding of large volumes of water behind fence, the barrier shall be replaced with a stone check dam.

3. Straw or hay mulch including hydroseeding is intended to provide cover for denuded or seeded areas until revegetation is established. Mulch placed between April 15th and October 1st on slopes of equal to or steeper than 15 percent shall be covered by a fabric netting and anchored with staples in accordance with manufacturer's recommendation. Mulch placed between October 1st and April 15th on slopes of less than 8 percent shall be anchored by applying water; mulch placed on slopes equal to or steeper than 8 percent shall be covered with a fabric netting and anchored with staples in accordance with the manufacturers recommendations. Slopes steeper than 3:1 which are to be revegetated shall receive curlex blankets by American Excelsior or equal.

4. Temporary stockpiles of stumps, grubbings, or common excavation will be protected as follows:

a) Temporary stockpiles shall not be located within 50 feet of the wetlands or open water, which will remain and shall be located away from drainage swales.

b) Stockpiles shall be stabilized within 7 days by either temporarily seeding the stockpile with a hydroseed method containing an emulsified mulch tackifier or by covering the stockpile with mulch.

c) Stockpiles shall be surrounded by silt fence at the time of formation.

5. All new denuded areas that are within 50 feet of a wetland or open water that will remain, which have been rough graded and are not located within the roadway subbase area, shall receive mulch or erosion control mesh fabric within 7 days of initial disturbance of soil. All areas within 50 feet of a wetland or open water body, which will remain shall be mulched prior to any predicted rain event regardless of the 7-day window. In other areas, the time period may be extended to 14 days.

6. For work, which is conducted between October 15 and April 15 of any calendar year, all denuded areas will be covered with hay mulch, applied at twice the normal application rate and anchored with a fabric netting. The time period for applying mulch as noted in Paragraph 5 above, shall be limited to 7 days for all areas.

7. Kensington Street shall be swept to control mud and dust as necessary.

8. During grubbing operations stone check dams may be installed at any evident concentrated flow discharge points.

9. Silt fencing with a minimum stake spacing of 6 feet should be used, unless the fence is supported by wire fence reinforcement of minimum 14-gauge and with a maximum mesh spacing of 6 inches, in which case stakes may be spaced a maximum of 10 feet apart. The bottom of the fence should be anchored.

10. Water and/or calcium chloride shall be furnished and applied in accordance with MDOT specifications – Section 637 – Dust Control.

11. Loam and seed is intended to serve as the primary permanent revegetative measure for all denuded areas not provided with other erosion control measures, such as riprap. Application rates are provided in the Seeding Plan. Seeding shall not occur over snow.

12. Temporary seed mixture shall be annual rye grass applied at the rate of 0.9 lbs/1000 sq. ft.

Permanent Erosion Control Measures

The following permanent erosion control measures have been designed as part of the Erosion/Sedimentation Control Plan:

1. All storm drain pipe outlets shall have riprap aprons at their outlet to protect the outlet and receiving channel of the culverts from scour and deterioration. Installation details are provided in the plan set. The aprons shall be installed and stabilized to the extent practicable prior to directing runoff to the tributary pipe or culvert.

2. All areas disturbed during construction, but not subject to other restoration (paving, riprap, etc.) will be loamed, limed, fertilized, mulched, and seeded. Fabric netting, anchored with staples, shall be placed over the mulch in areas as noted in paragraph 5 of Temporary Erosion Control Measures. All areas within 50' of a wetland or open water body, which will remain shall be mulched prior to any predicted rain event regardless of the 7-day window. Native topsoil shall be stockpiled and reused for final restoration when it is of sufficient quality.

3. Catch basins will be provided with sediment sumps and inlet hoods for all outlet pipes that are 12" in diameter.

Implementation Schedule

The following construction sequence shall be required to insure the effectiveness of the erosion and sedimentation control measures are optimized:

Note: For all grading activities, the contractor shall exercise extreme caution not to overexpose the site by limiting the disturbed area.

1. Install crushed stone stabilized construction entrance at the intersection of the site driveway and Kensington Street

2. Clear work areas

3. Install perimeter siltation fence for roadway construction and temporary parking and fill areas.

4. Clear and grub work areas using care not to overexpose the site.

5. During grubbing operations, install stone check dams at any evident concentrated flow discharge points.

6. Commence earthwork operations.

7. Commence excavation of building foundation.

8. Commence installation of waterline and sewer main.

9. Continue earthwork and grading to subgrade as necessary for construction.

10. Install light pole foundations and utility poles as well as underground elec./tel./cable services.

11. Complete all remaining earthwork operations.

12. Complete installation of all utilities.

13. Loam, lime, fertilize, seed, and mulch disturbed areas.

14. Remove accumulated sediment from ahead of any sediment barriers as necessary.

15. Once the site is stabilized and a 75% catch of vegetation has been obtained, remove all temporary erosion control measures.

16. Touch up loam and seed.

Note: All denuded (created by this construction) areas not subject to final paving, riprap or gravel, shall be revegetated.

Prior to construction of the access drives, parking areas and utilities, the contractor shall submit a schedule to the Owner for the completion of the work, which will satisfy the following criteria:

1. The above construction sequence should generally be completed in the specified order; however, several separate items may be constructed simultaneously. Work must also be scheduled or phased to prevent the extent of the exposed areas as specified below. The intent of this sequence is to provide for erosion control and to have structural measures such as silt fence and construction entrance in place before large areas of land are denuded.

2. The work shall be conducted in sections which will:

a) Limit the amount of exposed area to those areas in which work is expected to be undertaken during the proceeding 30 days.

b) Revegetate disturbed areas as rapidly as possible. All areas shall be permanently stabilized within 7 days of final grading or before a storm event; or temporarily stabilized within 7 days of initial disturbance of soil for areas within 50 feet of a wetland or open water body, which will remain and 14 days for all other areas. Areas within 50 feet of a wetland, which will remain shall be mulched prior to any predicted rain event regardless of the 7-day window.

c) Incorporate planned inlets and drainage system as early as possible into the construction phase. The ditches shall be immediately lined or revegetated as soon as their installation is complete.

Winter Stabilization Plan

It is anticipated that construction of the access road, utilities and other site improvements can be completed in one construction season. However, if any work is necessary between October 15 and April 15, the contractor shall submit a schedule which will satisfy the following criteria:
3. Once final grade has been established, the contractor may choose to dormant seed the disturbed areas prior to placement of mulch and placement of fabric netting anchored with staples.

a. If dormant seeding is used for the site, all disturbed areas shall receive 4" of loam and seed at an application rate of 5#/1000 s.f. Seeding shall not occur over snow.

All areas seeded during the winter months will be inspected in the spring for adequate catch. All areas sufficiently vegetated (less than 75 percent catch) shall be revegetated by replacing loam, seed and mulch.

b. If dormant seeding is not used for the site, all disturbed areas shall be revegetated in the spring.

4. The area of dless of denuded non-stabilized construction shall be limited to the minimum area practicable. An area shall be considered to be denuded until the subbase gravel is installed in the road or paved areas or the areas of future loam and seed have been loamed, seeded, and mulched. The mulch rate shall be twice the rate specified in the seeding plan (for example, 115#/1,000 s.f. x 2 = 230#/s.f.).

5. The schedule shall be subject to the approval of the Owner.

The Contractor must install any added measures which may be necessary to control erosion/sedimentation from the site dependent upon the actual site and weather conditions.

The Contractor shall note that no areas within 50 feet of a wetland shall remain denuded for a period of over 7 days before it is temporarily stabilized. Temporary stabilization shall be the installation of gravel or mulching. All other areas shall be stabilized within 14 days. For construction between October 15 and April 15 of any calendar year, all areas shall be temporarily stabilized with 7 days.

Provisions for Maintenance of the Erosion/Sedimentation Control Features

The Contractor shall prepare a list and designate by name, address and telephone number all individuals who will be responsible for implementation, inspection and maintenance of all erosion control measures identified within this section and as contained in the Erosion and Sedimentation Control Plan of the contract drawings. Specific responsibilities of the inspector(s) will include:

1. Assuring and certifying the owner's construction sequence is in conformance with the specified schedule of this section. A weekly certification stating compliance, any deviations, and corrective measures necessary to comply with the erosion control requirement of this section shall be prepared and signed by the inspector(s).

2. In addition to the weekly certifications, the inspector(s) shall maintain written reports recording construction activities on site which include:

Dates when major grading activities occur in a particular area.

Dates when major construction activities cease in a particular area, either temporarily or permanently.

Dates when an area is stabilized.
3. Inspection of this project work site on a weekly basis and after each significant rainfall event (0.5 inches or more within any consecutive 24 hour period) during construction until permanent erosion control measures have been properly installed and the site has been stabilized. Inspection of the project work site shall include:

Identification of proper erosion control measure installation in accordance with the erosion control detail sheet or as specified in this section.

Determine whether each erosion control measure is properly operating. If not, identify damage to the control device and determine remedial measures.

Identify areas which appear vulnerable to erosion and determine additional erosion control measures which should be used to improve conditions.

Inspect areas of recent seeding to determine percent catch of grass. A minimum catch of 75 percent is required prior to removal of erosion control measures.

Accumulated silt/sediment should be removed when the depth of sediment reaches 50 percent of the barrier height. Accumulated silt/sediment should be removed from behind silt fencing when the depth of the sediment reaches 6 inches.

4. If inspection of the site indicates a change should be made to the erosion control plan, either to improve effectiveness or correct a site specific deficiency, the inspector shall immediately implement the corrective measure and notify the Owner of the change.

Preconstruction Conference

Prior to any construction at the site, representatives of the Contractor shall arrange for and meet with the Owner and a representative of the City to discuss the scheduling of the site construction. On or before that meeting, the Contractor will prepare a detailed schedule and a marked-up site plan indicating areas and components of the work and key dates showing date of disturbance and completion of the work.

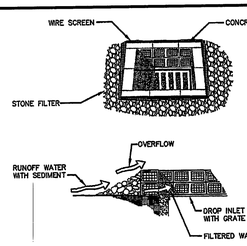

SPECIFIC APPLICATION

THIS METHOD OF INLET PROTECTION IS APPLICABLE WHERE HEAVY FLOWS ARE EXPECTED AND WHERE AN OVERFLOW CAPACITY IS NECESSARY TO PREVENT EXCESSIVE PONDING AROUND THE STRUCTURE.

NOTES:
1. PLACE CONCRETE BLOCKS LENGTHWISE ON THEIR SIDES IN A SINGLE ROW AROUND THE PERIMETER OF THE INLET, WITH THE ENDS OF ADJACENT BLOCKS ABUTTING. THE HEIGHT OF THE BARRIER CAN BE VARIED, DEPENDING ON DESIGN NEEDS, BY STACKING COMBINATIONS OF 4", 8" AND 12" WIDE BLOCKS. THE BARRIER OF BLOCKS SHALL BE AT LEAST 12 INCHES HIGH, AND NO GREATER THAN 24" HIGH.
2. WIRE MESH SHALL BE PLACED OVER THE OUTSIDE VERTICAL FACE (WIDEBING) OF THE CONCRETE BLOCKS TO PREVENT STONE FROM BEING WASHED THROUGH THE HOLES IN THE BLOCKS. HARDWARE CLOTH OR COMPARABLE WIRE MESH WITH 1/2" OPENINGS SHALL BE USED.
3. STONE SHALL BE PILED AGAINST THE WIRE TO THE TOP OF THE BLOCK BARRIER, AS SHOWN IN DETAIL. THE STONE FILTER SHALL BE 3/4" CRUSHED STONE.
4. IF THE STONE FILTER BECOMES CLOGGED WITH SEDIMENT, SO THAT IT NO LONGER ADEQUATELY PERFORMS ITS FUNCTION, THE STONE MUST BE PULLED AWAY FROM THE BLOCKS, CLEANED AND REPLACED.

STONE SEDIMENT BARRIER

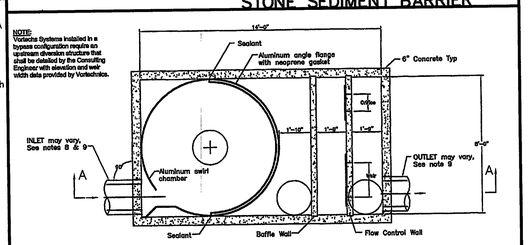

PLAN VIEW B – B

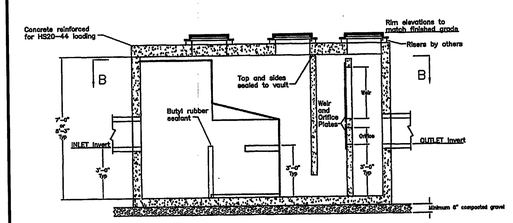

SECTION A – A

NOTES:
1. Stormwater Treatment System (SWTS) shall have:
Peak treatment capacity: 11 cfs
Sediment storage: 450 cy-yd
Oil storage capacity: 500 gals
2. SWTS shall be constructed in one rectangular structure
3. SWTS removal efficiency shall be based on a 50 micron particle
4. SWTS shall retain floatables and trapped sediment up to and including peak treatment capacity
5. SWTS inlets in and out shall be at the same elevation
6. SWTS shall not be compromised by effects of downstream tailwater
7. SWTS shall have no internal components that obstruct maintenance access
8. Inlet pipe must be perpendicular to the structure
9. Pipe orientation may vary; see site plan for size and location
10. Purchaser shall not be responsible for assembly of unit
11. Manhole frames and perforated covers supplied with system, not installed
12. Purchaser to prepare excavation and provide lifting equipment
13. Contact Vortechnics @ (207) 878-0202 for ordering information

WATER QUALITY UNIT
N.T.S.

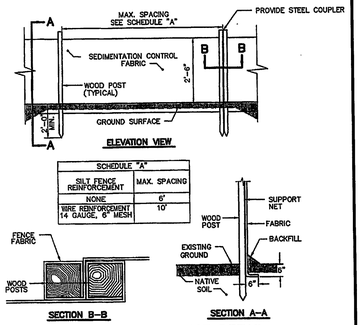

SILTATION FENCE DETAIL
N.T.S

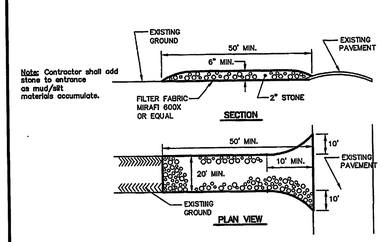

STABILIZED CONSTRUCTION ENTRANCE DETAIL
N.T.S.

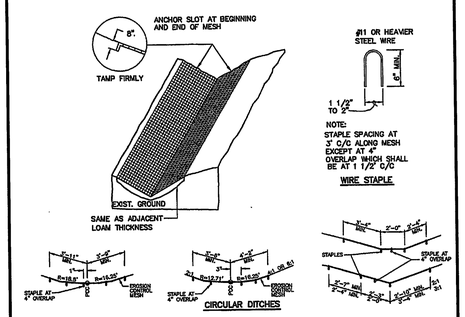

STAPLES AT EDGES, AT QUARTER POINTS, AT 4" OVERLAP

EROSION CONTROL MESH
N.T.S.

Released For Construction
6-2-04

FAIRFIELD MAINE
PORTLAND MAINE
Sheridan
CORPORATION

DRAWN BY KSL
APPROVED BY
SCALE As Noted
DATE 5-6-04
TYPE

TITLE PHASE 2 EROSION & SEDIMENTATIN CONTROL DETAILS
MAINE YACHT CENTER FACILITY
100 KENSINGTON ST., PORTLAND, ME.

JOB NO. 03001.7
ENGINEERING Engineering Designs Inc.
MAINE YACHT CENTER, LLC
65 KENSINGTON STREET
PORTLAND, MAINE
DESIGN BUILDER
DWG. NO. C-203

WARNING: THIS DRAWING IS THE PROPERTY AND INSTRUMENT OF SHERIDAN CORPORATION FOR USE WITH THE PROJECT REFERRED BELOW. NO MODIFICATIONS OR CHANGES MAY BE MADE TO THIS DRAWING AND NO USE MAY BE MADE OF THIS DRAWING WITHOUT THE EXPRESS WRITTEN PERMISSION OF SHERIDAN CORPORATION, AND NO LIABILITY FOR SUCH USE. SHERIDAN CORPORATION WILL NOT BE HELD LIABLE FOR ANY MODIFICATION, CHANGE OR USE OF THIS DRAWING WHICH MAY BE MADE AT THE USER'S RISK. SHERIDAN DISCLAIMS ANY AND ALL LIABILITY FOR SUCH USE.