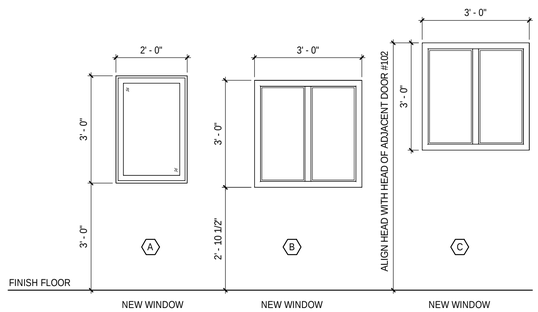

J3 WINDOW LEGEND
1/2" = 1'-0"

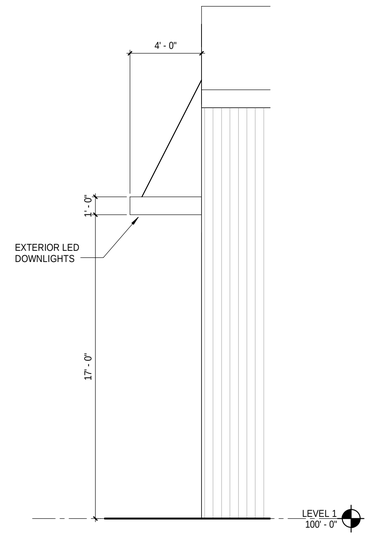

J6 CANOPY ELEVATION
1/4" = 1'-0"

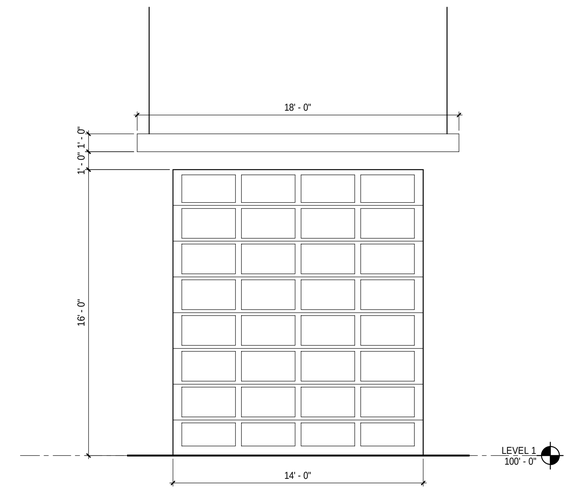

J9 STOREFRONT ENLARGED EXTERIOR ELEVATION
1/4" = 1'-0"

LIFT SUPPORT NOTES:

1. THIS DESIGN IS BASED ON THE FOLLOWING ASSUMPTION: EXISTING CONCRETE SLAB IS A MINIMUM OF 8" THICK SLAB ON GRADE
2. CONTRACTOR SHALL FIELD VERIFY THIS ABOVE ASSUMPTION PRIOR TO CONSTRUCTION.
3. NOTIFY SMRT IF THE EXISTING SLAB IS DIFFERENT THAN ASSUMED. CONTINUOUS CONCRETE WALL FOOTINGS MIGHT BE REQUIRED.

DOOR AND FRAME SCHEDULE

DOOR #	DOOR WIDTH	DOOR HEIGHT	DOOR THICK	DOOR MAT'L	DOOR ELEV	GLAZ	FRAME MAT'L	FRAME ELEV	FIRE RATING
101	3' - 0"	7' - 0"	0' - 1 3/4"	HM	F1	INSULATED TEMPERED	HM	F2	1
101a	14' - 0"	16' - 0"	0' - 2"	STL	OHD	INSULATED TEMPERED	STL	F3	
102	3' - 0"	7' - 0"	0' - 1 3/4"	HM	F2	INSULATED TEMPERED	HM	F2	1

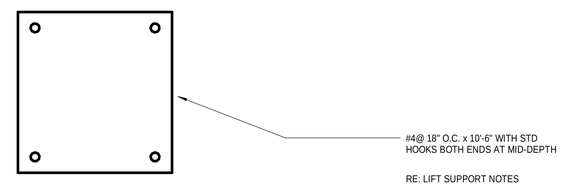

K9 LIFT SUPPORT SLAB - BASE PLATE DETAIL
3" = 1'-0"

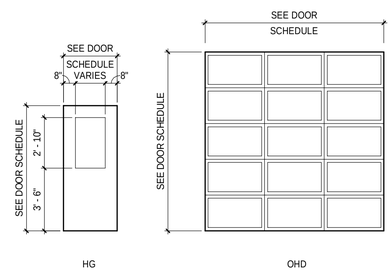

C4 DOOR LEAF TYPES
1/4" = 1'-0"

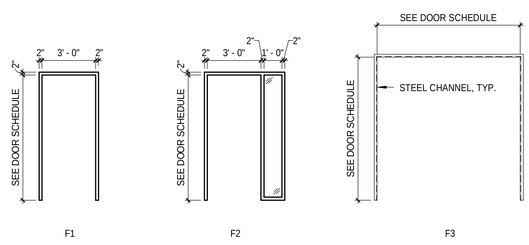

A4 DOOR TYPES
1/4" = 1'-0"

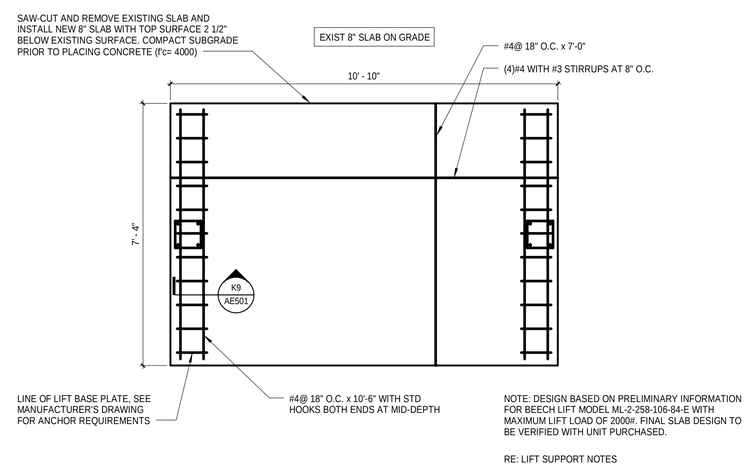

A9 LIFT SUPPORT SLAB
1/2" = 1'-0"

144 Fore Street P.O. Box 618
Portland, Maine 04104
tel. (207) 772-3846
fax. (207) 772-1070
www.smrtinc.com

ARCHITECTURE
ENGINEERING
PLANNING
INTERIORS
ENERGY
SMRT

LICENSED ARCHITECT
JANET L. HANSEN
#1951
STATE OF MAINE
5-12-16

SELF-STORAGE TENANT FIT-UP
235 PRESUMPSCOT STREET

PERMIT SET
5-12-16

CURRENT ISSUE STATUS:

REV	DESCRIPTION	DATE

GRAPHIC SCALE: 0" 1"

SCALE:	As indicated
PROJECT MANAGER:	JLH
JC/DRAWN BY:	SHK
A/E OF RECORD:	JLH
PROJECT NO:	15105
SMRT FILE:	AE501 - 15105
DATE:	

SHEET TITLE:
DETAILS

SHEET No.
AE501

© COPYRIGHT 2014 SMRT INC