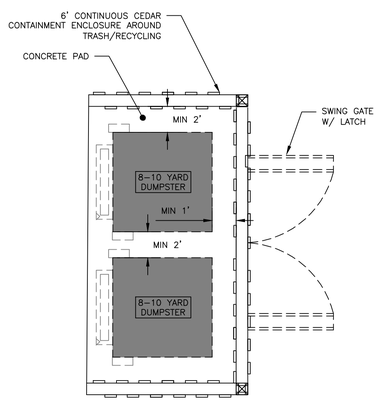

TRASH ENCLOSURE
NOT TO SCALE

NOTE:

1. WARNING TAPE TO BE PLACED BETWEEN PIPE AND FINISH GRADE.
2. WARNING TAPE TO MEET AMERICAN PUBLIC WORKS ASSOCIATION STANDARDS.

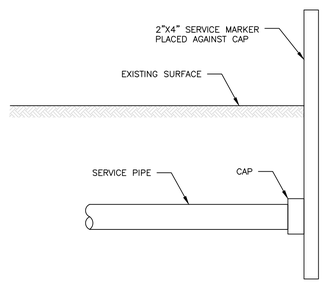

SERVICE CAP AND MARK DETAIL
NOT TO SCALE

NOTE:

REFER TO THE GRADING AND DRAINAGE PLANS FOR ADDITIONAL INFORMATION

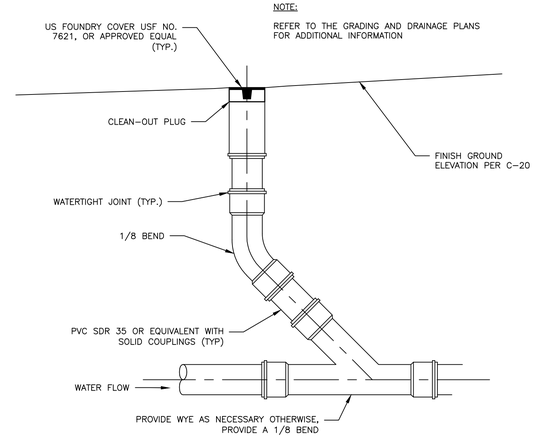

CLEANOUT DETAIL
NOT TO SCALE

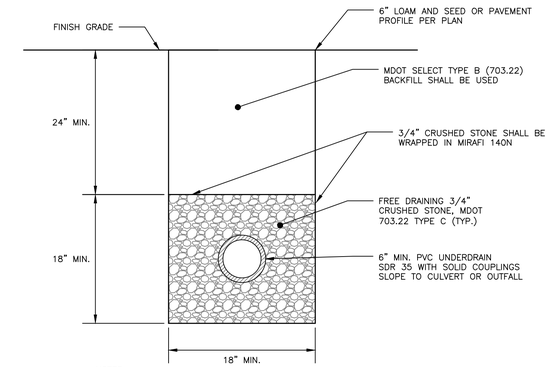

NOTES:

1. MINIMUM UNDERDRAIN SLOPE 0.0025 (0.25%)
2. PERFORATIONS IN UNDERDRAIN PIPE SHALL BE ORIENTED DOWN.

UNDERDRAIN DETAIL
NOT TO SCALE

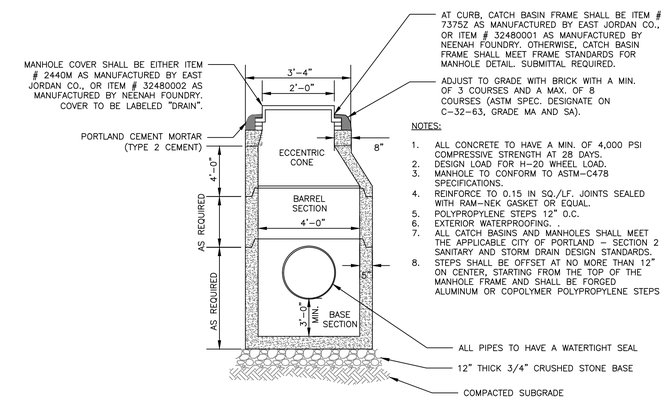

NOTES:

1. ALL CONCRETE TO HAVE A MIN. OF 4,000 PSI COMPRESSIVE STRENGTH AT 28 DAYS.
2. DESIGN LOAD FOR H-20 WHEEL LOAD.
3. MANHOLE TO CONFORM TO ASTM-C478 SPECIFICATIONS.
4. REINFORCE TO 0.15 IN SQ./LF. JOINTS SEALED WITH RAM-NEK GASKET OR EQUAL.
5. POLYPROPYLENE STEPS 12" O.C.
6. EXTERIOR WATERPROOFING.
7. ALL CATCH BASINS AND MANHOLES SHALL MEET THE APPLICABLE CITY OF PORTLAND - SECTION 2 SANITARY AND STORM DRAIN DESIGN STANDARDS.
8. STEPS SHALL BE OFFSET AT NO MORE THAN 12" ON CENTER, STARTING FROM THE TOP OF THE MANHOLE FRAME AND SHALL BE FORGED ALUMINUM OR COPOLYMER POLYPROPYLENE STEPS

4'-0" DIAMETER PRECAST DRAINAGE MANHOLE
NOT TO SCALE

NOTES:

1. BICYCLE RACK SHALL HAVE CAPACITY FOR TWO BICYCLES.
2. BICYCLE RACK PARTS SHALL BE OF UNIFORM COLOR AND SHALL BE FINISHED IN ACCORDANCE WITH PRODUCT SPECIFICATION. PER CITY OF PORTLAND TECHNICAL STANDARDS ALL BIICYCLE RACKS WITHIN THE RIGHT-OF-WAY SHALL MATCH THE FURNITURE COLOR FOR THAT LOCATION AS DESCRIBED IN THE MUNICIPAL LIGHTING STANDARDS; IF NO DESIGNATED COLOR FOR THAT AREA EXISTS, BICYCLE RACKS SHALL BE BLACK.
3. BICYCLE RACK SHALL BE INSTALLED IN ACCORDANCE WITH MANUFACTURER'S MOST RECENT INSTALLATION RECOMMENDATIONS, AND SHALL BE INSTALLED WITH AN IN-GROUND MOUNT UNLESS OTHERWISE APPROVED BY ENGINEER.
4. BICYCLE RACK SHALL BE "DERO BIKE HITCH", AS MANUFACTURED BY DERO BIKE RACKS.
5. MINIMUM OFFSETS SHOWN. MANUFACTURER'S RECOMMENDED OFFSETS SHALL BE ENFORCED WHERE POSSIBLE.
6. MINIMUM DISTANCE BETWEEN BICYCLE RACKS SHALL BE 24". RECOMMENDED DISTANCE BETWEEN BICYCLE RACKS SHALL BE 38".
7. ALL OFFSETS ARE FROM OUTSIDE EDGES OF ITEMS.
8. COMPACT SUBGRADE TO 95% MAXIMUM DRY DENSITY IN ACCORDANCE WITH ASTM D-1557.

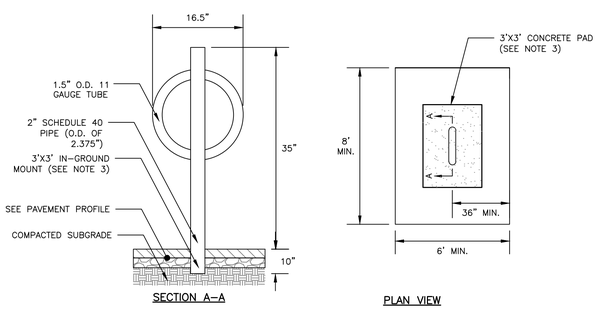

BICYCLE RACK DETAIL
NOT TO SCALE

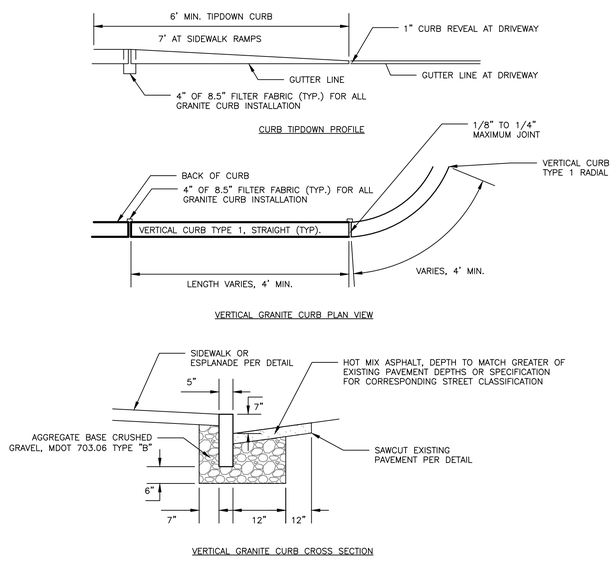

VERTICAL GRANITE CURB AND TIPDOWN INSTALLATION
NOT TO SCALE

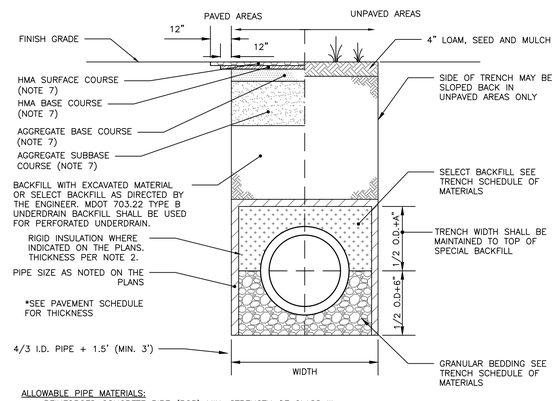

ALLOWABLE PIPE MATERIALS:

- REINFORCED CONCRETE PIPE (RCP) MIN. STRENGTH OF CLASS III
- PVC RING TYPE SEWER (SDR 35) OR EQUIVALENT, MIN PS-46 RATING
- PVC RING TYPE SEWER PIPE MEETING ASTM F 789
- DUCTILE IRON PIPE (DIP)
- ADS N-12 HP TRIPLE-WALL MIN PS-46 RATING
- ADS SANITITE HP MIN. PS-46

SCHEDULE OF MATERIALS

TYPE OF PIPE	GRANULAR BEDDING	SELECT BACKFILL
CMP DUCTILE IRON RCP	MDOT 703.22 TYPE B UD BACKFILL	MDOT 703.22 TYPE B UD BACKFILL
PVC/HDPE	MDOT 703.22 TYPE C 3/4" CRUSHED STONE	MDOT 703.22 TYPE B UD BACKFILL
CMP	MDOT 703.22 TYPE C 3/4" CRUSHED STONE	MDOT 703.22 TYPE C 3/4" CRUSHED STONE

NOTES:

1. BRACING AND SHEETING OR OTHER TRENCH PROTECTION TO BE PROVIDED TO MEET APPLICABLE STATE AND O.S.H.A. SAFETY STANDARDS. ALL SUCH TRENCH PROTECTION TO BE THE RESPONSIBILITY OF THE CONTRACTOR.
2. STORM DRAIN COVER BETWEEN 2' AND 3' SHALL INCLUDE 4" OF RIGID INSULATION. COVER BETWEEN 3' AND 4' SHALL INCLUDE 2' RIGID INSULATION. OTHER UTILITIES: ADD 2" OF RIGID INSULATION FOR EACH FOOT ABOVE MINIMUM DEPTH.
3. INSTALL WARNING TAPE DIRECTLY ABOVE UTILITIES AT THE TOP OF SUBGRADE.
4. MINIMUM COVER
   4.1. 2'-0" - STORM DRAIN
   4.2. 5'-0" - SEWER
5. NO TREES SHALL BE PLANTED WITHIN 5' OF A SEWER PIPE OR SERVICE
6. THIS DETAIL SHALL BE APPLIED ONLY TO DRAINAGE PIPE TRENCHES OUTSIDE OF THE CITY OF PORTLAND ROW.
7. THICKNESS AS NOTED BY SURFACE DETAILS

STORM DRAIN TYPICAL TRENCH SECTION
NOT TO SCALE

FINAL APPLICATION
NOT ISSUED FOR
CONSTRUCTION

ISSUED FOR	BY	DATE
FINAL APP	WHS	6/28/18
COMMENT RESPONSE	WHS	6/28/18

DRAWING NAME: UTILITY & DRAINAGE DETAILS

PROJECT NAME: 197 PRESUMPSCOT STREET REDEVELOPMENT

CLIENT: MAINE YACHT CENTER, LLC
100 KENSINGTON ST PORTLAND, MAINE 04103

ACORN ENGINEERING, INC.
158 DANFORTH STREET PORTLAND, MAINE 04102
(207) 775-2655

THIS PLAN SHALL NOT BE MODIFIED WITHOUT WRITTEN PERMISSION FROM ACORN ENGINEERING, INC. ANY MODIFICATIONS, WHETHER OR OTHERWISE, SHALL BE AT THE USER'S SOLE RISK AND WITHOUT LIABILITY TO ACORN ENGINEERING, INC.

FILE:	1102_CIVIL
JN:	1102
SCALE:	NTS
DESIGNED BY:	OJD
DRAWN BY:	OJD
CHECKED BY:	WHS

STATE OF MAINE
WILLIAM H. SAVAGE
No. 11419
8-13-18
LICENSED
PROFESSIONAL ENGINEER

DRAWING NO.
C-31