ISSUED FOR CONSTRUCTION

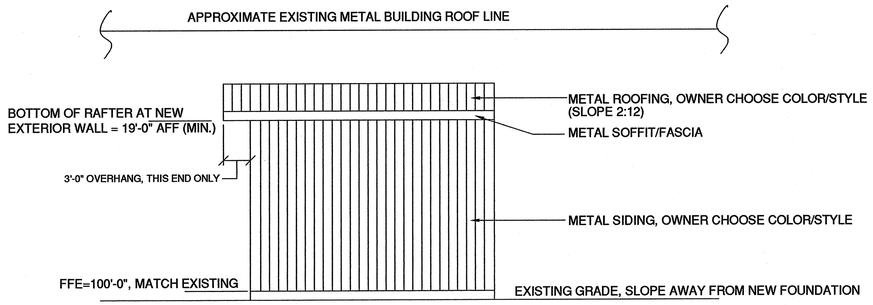

"WEST SIDE" ELEVATION
SCALE: 1/8"=1'-0"

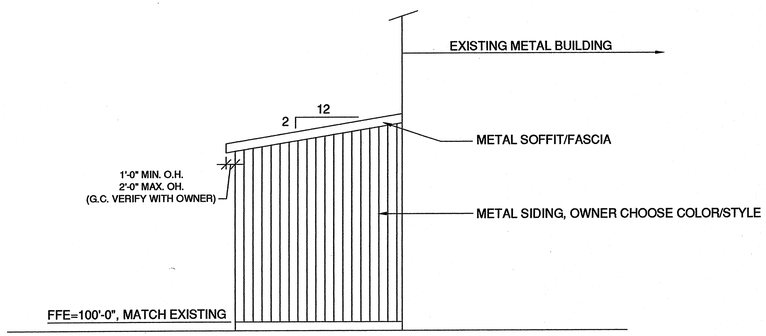

"SOUTH SIDE" ELEVATION
SCALE: 1/8"=1'-0"

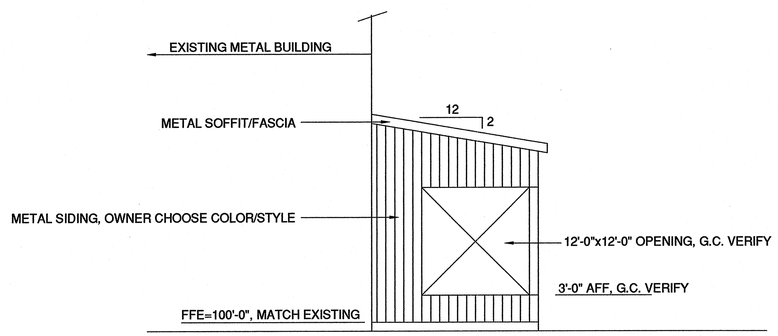

"NORTH SIDE" ELEVATION
SCALE: 1/8"=1'-0"

STATE OF MAINE
Steven R. Grant 6625
REGISTERED PROFESSIONAL ENGINEER
6-22-04

REV:	BY:	DATE:	STATUS:

THIS PLAN SHALL NOT BE MODIFIED WITHOUT WRITTEN PERMISSION FROM SRG ENGINEERING, INC. ANY ALTERATIONS, AUTHORIZED OR OTHERWISE, SHALL BE AT THE USER'S SOLE RISK AND WITHOUT LIABILITY TO SRG ENGINEERING, INC.

SRG ENGINEERING, INC.
CONSULTING STRUCTURAL ENGINEERS
P.O. BOX 925
GRAY, ME 04039
TEL: (207) 657-7323
FAX: (207) 657-7342
EMAIL: SRG@SRGENG.COM

PROJECT NO.	EOR	DESIGN	CHK'D	DRAWN
04-067	SRG	SRG	SRG	SRG

ELEVATIONS
OF
SIGCO GLASS ADDITION
PORTLAND, MAINE
FOR
HARDYPOND CONSTRUCTION
PORTLAND, MAINE

DATE	SCALE
06-22-04	NONE

SHEET S4