PARKING LOT EXPANSION
MOODY'S COLLISION CENTERS

495 PRESUMPSCOT STREET
PORTLAND, MAINE 04103

APPLICANT:
REAL ESTATE
HOLDINGS, LLC
200 NARRAGANSETT STREET
GORHAM, MAINE 04038

ENGINEER/SURVEYOR:

SEBAGO TECHNICS
WWW.SEBAGOTECHNICS.COM
75 John Roberts Rd. Suite 1A South Portland, ME 04106 Tel. 207-200-2100
250 Goddard Rd. Suite B Lewiston, ME 04240 Tel. 207-783-5656

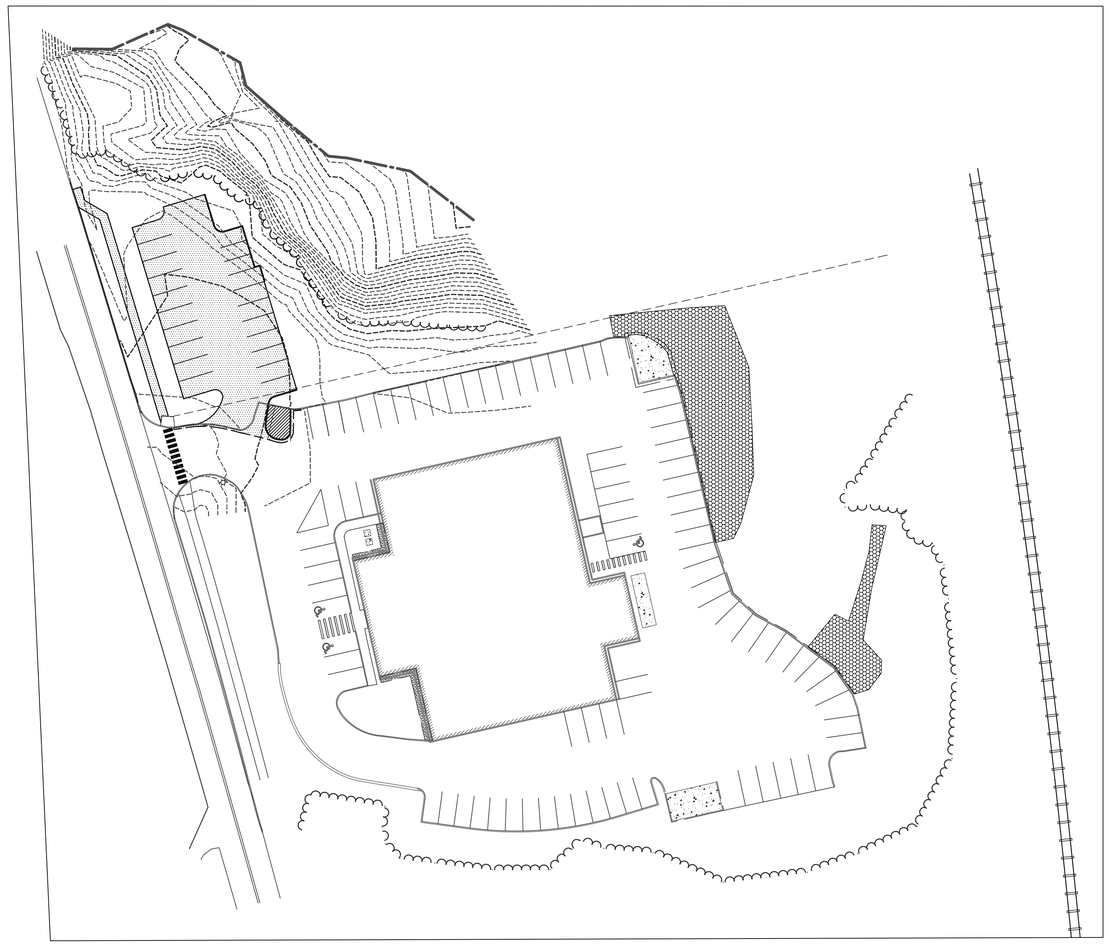

SCALE: 1"=40'

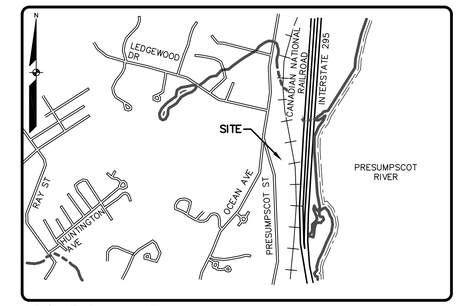

LOCATION MAP NTS

SHEET INDEX:

SHEET	DESCRIPTION
1	COVER SHEET
2	EXISTING CONDITIONS PLAN
3	SITE PLAN
4	GRADING AND UTILITY PLAN
5	LANDSCAPE PLAN
6	DETAILS
7	DETAILS

REVISED THROUGH 09-15-15

GENERAL NOTES:

1. THE RECORD OWNER OF THE PARCEL IS REAL ESTATE HOLDINGS LLC BY DEED RECORDED AT THE CUMBERLAND COUNTY REGISTRY OF DEEDS (CCRD) IN BOOK 26299 PAGE 76 AND BOOK 26922 PAGE 76.

2. THE PROPERTY IS SHOWN AS MAP-BLOCK-LOTS 415-B-9, 418A-C-001, AND 419A-A-7-8 ON THE CITY OF PORTLAND TAX MAPS AND IS LOCATED IN THE IM ZONE.

3. SPACE AND BULK CRITERIA FOR THE IM ZONE ARE AS FOLLOWS:
   MIN. LOT SIZE: NONE FOR PROPOSED USES
   MIN. STREET FRONTAGE: 60 FEET
   MIN. FRONT YARD: 1 FOOT PER FOOT OF BUILDING HEIGHT
   MIN. SIDE YARD: 1 FOOT PER FOOT OF BUILDING HEIGHT UP TO MAX. OF 25 FEET
   MIN. REAR YARD: 1 FOOT PER FOOT OF BUILDING HEIGHT UP TO MAX. OF 25 FEET
   MAX. BUILDING HEIGHT: 75 FEET
   MAX. IMPERVIOUS SURFACE RATIO: 75%
   * SEE ORDINANCE FOR MORE PARTICULAR INFORMATION

4. TOTAL AREA OF PARCEL IS APPROXIMATELY 3.3 ACRES.

5. BOUNDARY INFORMATION SHOWN HEREON IS BASED UPON PLAN REFERENCED IN 7A AND DEED 26922 PAGE 76.

6. TOPOGRAPHIC INFORMATION SHOWN HEREON IS BASED UPON FIELD SURVEYS BY SEBAGO TECHNICS, INC., FROM 2007 THROUGH 2015.

7. PLAN REFERENCES:
   A. A PLAN ENTITLED BOUNDARY SURVEY/SITE PLAN OF 469 PRESUMPSCOT STREET, PORTLAND MAINE FOR 469 PRESUMPSCOT STREET, LLC BY BACK BAY BOUNDARY, INC., DATED 3/06/2003, AND RECORDED IN THE CUMBERLAND COUNTY REGISTRY OF DEEDS IN PLAN BOOK 204, PAGE 626.

8. A WETLAND DELINEATION WAS PERFORMED ON THIS PROJECT SITE DURING SEPTEMBER 2007 BY ALEX FINEMORE, SEBAGO TECHNICS, INC. AND LOCATED BY GROUND SURVEY. THIS DELINEATION CONFORMS TO THE STANDARDS AND METHODS OUTLINED IN THE 1987 WETLANDS DELINEATION MANUAL AUTHORED AND PUBLISHED BY THE U.S. ARMY CORPS OF ENGINEERS.

9. THE BEARINGS, COORDINATES, AND ELEVATIONS SHOWN HEREON ARE BASED UPON THE MAINE STATE PLANE COORDINATE GRID, WEST ZONE 1802 ON NAD83 AND NAVD88 IN US FEET. THE VERTICAL SHIFT TO NGVD 1929 AT THIS SITE IS 0.699 FT. AS COMPUTED BY THE U.S. ARMY CORPS OF ENGINEERS CORPSCON PROGRAM VERSION 6.0.1.

10. UTILITY INFORMATION DEPICTED HEREON IS COMPILED USING PHYSICAL EVIDENCE LOCATED IN THE FIELD. UTILITIES DEPICTED HEREON MAY NOT NECESSARILY REPRESENT ALL EXISTING UTILITIES. CONTRACTORS AND/OR DESIGNERS NEED TO CONTACT DIG-SAFE SYSTEMS, INC. (1-888-DIG-SAFE) AND FIELD VERIFY EXISTING UTILITIES PRIOR TO CONSTRUCTION AND/OR EXCAVATION.

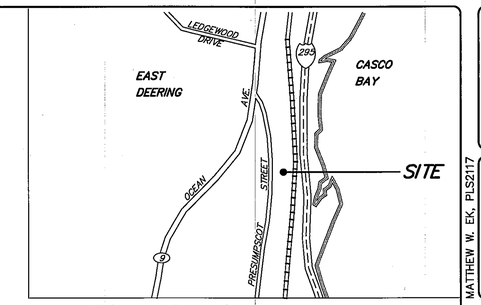

LOCATION MAP N.T.S.

LEGEND

EXISTING	DESCRIPTION	AS-BUILT	EXISTING	DESCRIPTION	PROPOSED	AS-BUILT
	BOUNDARY LINE/R.O.W.			GUARDRAIL		
	ABUTTER LINE/R.O.W.			GAS		
	MONUMENT			WATER		
	IRON PIPE/ROD			WATER GATE VALVE		
C1/L1	CURVE/LINE NO.			HYDRANT		
	BENCHMARK			SEWER MH		
	BUILDING			STORM DRAIN		
	SIGN			CATCH BASIN		
	EDGE PAVEMENT			DRAINAGE MH		
	EDGE CONCRETE			CULVERT		
	PAVEMENT PAINT		OHE	OVERHEAD ELECTRIC		
	EDGE GRAVEL			UNDERGROUND ELECTRIC		
	CURBLINE			LIGHT POLE/WALL		
	TREELINE			UTILITY POLE		
55	CONTOURS			RIPRAP		
	STOCKADE FENCE			WETLANDS		
	DECIDUOUS TREE			EDGE WETLAND		
	CONIFEROUS TREE					

MATTHEW W. EK, PLS2117

DESIGNED	CHECKED
MWE	MWE

REV:	BY:	DATE:	STATUS:
B	SMF	8-6-15	REVISED PER CITY COMMENTS
A	SMF	7-8-15	CITY OF PORTLAND SITE PLAN

THIS PLAN SHALL NOT BE MODIFIED WITHOUT WRITTEN PERMISSION FROM SEBAGO TECHNICS, INC. ANY ALTERATIONS, AUTHORIZED OR OTHERWISE, SHALL BE AT THE USER'S SOLE RISK AND WITHOUT LIABILITY TO SEBAGO TECHNICS, INC.

SEBAGO TECHNICS
WWW.SEBAGOTECHNICS.COM
75 John Roberts Rd. Suite A South Portland, ME 04106 Tel. 207-200-2100
250 Goddard Rd. Suite B Lewiston, ME 04240 Tel. 207-783-5656

EXISTING CONDITIONS PLAN
OF:
MOODY'S COLLISION CENTER
495 PRESUMPSCOT STREET
PORTLAND, ME
FOR:
MOODY'S COLLISION CENTER
200 NARRAGANSETT STREET
GORHAM, MAINE 04038

PROJECT NO.	SCALE
07548	1" = 30'

SHEET 2 OF 6

07548EC-2015.dwg, TAB: 24x36

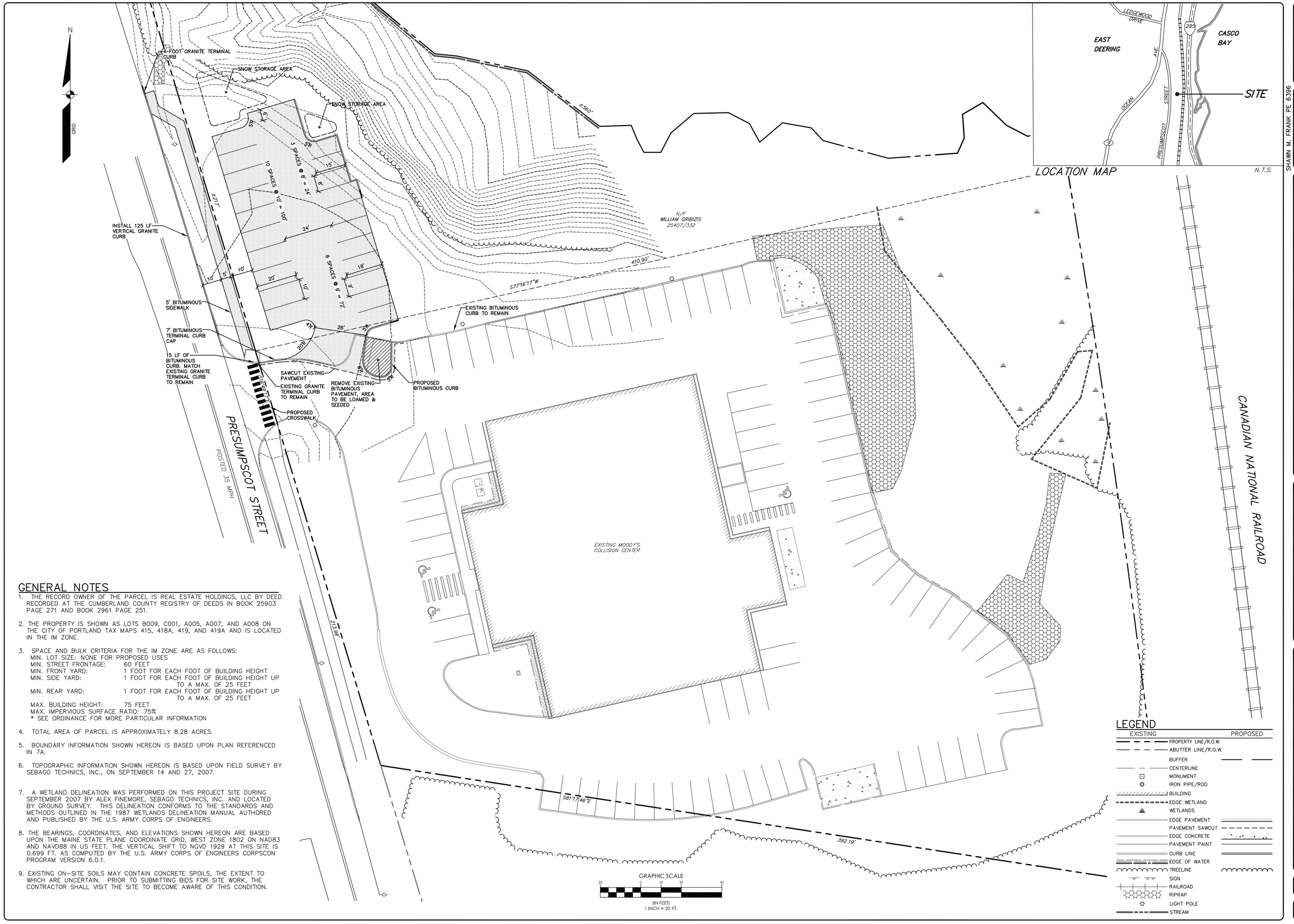

GENERAL NOTES

1. THE RECORD OWNER OF THE PARCEL IS REAL ESTATE HOLDINGS, LLC BY DEED RECORDED AT THE CUMBERLAND COUNTY REGISTRY OF DEEDS IN BOOK 25903 PAGE 271 AND BOOK 2961 PAGE 251.

2. THE PROPERTY IS SHOWN AS LOTS B009, C001, A005, A007, AND A008 ON THE CITY OF PORTLAND TAX MAPS 415, 418A, 419, AND 419A AND IS LOCATED IN THE IM ZONE.

3. SPACE AND BULK CRITERIA FOR THE IM ZONE ARE AS FOLLOWS:
   MIN. LOT SIZE: NONE FOR PROPOSED USES
   MIN. STREET FRONTAGE: 60 FEET
   MIN. FRONT YARD: 1 FOOT FOR EACH FOOT OF BUILDING HEIGHT
   MIN. SIDE YARD: 1 FOOT FOR EACH FOOT OF BUILDING HEIGHT UP TO A MAX. OF 25 FEET
   MIN. REAR YARD: 1 FOOT FOR EACH FOOT OF BUILDING HEIGHT UP TO A MAX. OF 25 FEET
   MAX. BUILDING HEIGHT: 75 FEET
   MAX. IMPERVIOUS SURFACE RATIO: 75%
   * SEE ORDINANCE FOR MORE PARTICULAR INFORMATION

4. TOTAL AREA OF PARCEL IS APPROXIMATELY 8.28 ACRES.

5. BOUNDARY INFORMATION SHOWN HEREON IS BASED UPON PLAN REFERENCED IN 7A.

6. TOPOGRAPHIC INFORMATION SHOWN HEREON IS BASED UPON FIELD SURVEY BY SEBAGO TECHNICS, INC., ON SEPTEMBER 14 AND 27, 2007.

7. A WETLAND DELINEATION WAS PERFORMED ON THIS PROJECT SITE DURING SEPTEMBER 2007 BY ALEX FINEMORE, SEBAGO TECHNICS, INC. AND LOCATED BY GROUND SURVEY. THIS DELINEATION CONFORMS TO THE STANDARDS AND METHODS OUTLINED IN THE 1987 WETLANDS DELINEATION MANUAL AUTHORED AND PUBLISHED BY THE U.S. ARMY CORPS OF ENGINEERS.

8. THE BEARINGS, COORDINATES, AND ELEVATIONS SHOWN HEREON ARE BASED UPON THE MAINE STATE PLANE COORDINATE GRID, WEST ZONE 1802 ON NAD83 AND NAVD88 IN US FEET. THE VERTICAL SHIFT TO NGVD 1929 AT THIS SITE IS 0.699 FT. AS COMPUTED BY THE U.S. ARMY CORPS OF ENGINEERS CORPSCON PROGRAM VERSION 6.0.1.

9. EXISTING ON-SITE SOILS MAY CONTAIN CONCRETE SPOILS, THE EXTENT TO WHICH ARE UNCERTAIN. PRIOR TO SUBMITTING BIDS FOR SITE WORK, THE CONTRACTOR SHALL VISIT THE SITE TO BECOME AWARE OF THIS CONDITION.

LEGEND

EXISTING		PROPOSED
	PROPERTY LINE/R.O.W.	
	ABUTTER LINE/R.O.W.	
	BUFFER	
	CENTERLINE	
	MONUMENT	
	IRON PIPE/ROD	
	BUILDING	
	EDGE WETLAND	
	WETLANDS	
	EDGE PAVEMENT	
	PAVEMENT SAWCUT	
	EDGE CONCRETE	
	PAVEMENT PAINT	
	CURB LINE	
	EDGE OF WATER	
	TREELINE	
	SIGN	
	RAILROAD	
	RIPRAP	
	LIGHT POLE	
	STREAM	

SHAWN M. FRANK PE 6396

STATE OF MAINE — SHAWN M. FRANK NO. 6396 — LICENSED PROFESSIONAL ENGINEER — 9-15-15

DESIGNED	CHECKED
DJS	SMF

REV:	BY:	DATE:	STATUS:
C	SMF	9-15-15	REVISED PER CITY COMMENTS
B	SMF	8-6-15	REVISED PER CITY COMMENTS
A	SMF	7-8-15	CITY OF PORTLAND SITE PLAN

THIS PLAN SHALL NOT BE MODIFIED WITHOUT WRITTEN PERMISSION FROM SEBAGO TECHNICS, INC. ANY ALTERATIONS, AUTHORIZED OR OTHERWISE, SHALL BE AT THE USER'S SOLE RISK AND WITHOUT LIABILITY TO SEBAGO TECHNICS, INC.

SEBAGO TECHNICS
WWW.SEBAGOTECHNICS.COM
75 John Roberts Rd. Suite 1A South Portland, ME 04106 Tel. 207-200-2100
250 Goddard Rd. Suite 1 Lewiston, ME 04240 Tel. 207-783-5656

SITE PLAN: PARKING LOT EXPANSION
OF:
MOODY'S COLLISION CENTER: PORTLAND
495 PRESUMPSCOT STREET
PORTLAND, ME 04103
FOR:
REAL ESTATE HOLDINGS, LLC
200 NARRAGANSETT STREET
GORHAM, ME 04038

PROJECT NO.	SCALE
07548	1" = 20'

SHEET 3 OF 7

07548S.dwg, TAB: OVERALL SITE LAYOUT PLAN

CONSTRUCTION NOTES

1. ALL WORK SHALL CONFORM TO THE APPLICABLE CODES AND ORDINANCES.

2. CONTRACTOR SHALL VISIT THE SITE AND FAMILIARIZE HIM OR HERSELF WITH ALL CONDITIONS AFFECTING THE PROPOSED WORK AND SHALL MAKE PROVISIONS AS TO THE COST THEREOF. CONTRACTOR SHALL BE RESPONSIBLE FOR FAMILIARIZING HIM OR HERSELF WITH ALL CONTRACT DOCUMENTS, FIELD CONDITIONS AND DIMENSIONS AND CONFIRMING THAT THE WORK MAY BE ACCOMPLISHED AS SHOWN PRIOR TO PROCEEDING WITH CONSTRUCTION. ANY DISCREPANCIES SHALL BE BROUGHT TO THE ATTENTION OF THE ENGINEER PRIOR TO THE COMMENCEMENT OF WORK.

3. CONTRACTOR SHALL NOTIFY ENGINEER OF ALL PRODUCTS OR ITEMS NOTED AS "EXISTING" WHICH ARE NOT FOUND IN THE FIELD.

4. INSTALL ALL EQUIPMENT AND MATERIALS IN ACCORDANCE WITH MANUFACTURER'S RECOMMENDATIONS AND OWNER'S REQUIREMENTS UNLESS SPECIFICALLY OTHERWISE INDICATED OR WHERE LOCAL CODES OR REGULATIONS TAKE PRECEDENCE.

5. CONTRACTOR SHALL VERIFY ALL DIMENSIONS AND CONDITIONS IN THE FIELD PRIOR TO FABRICATION AND ERECTION OF ANY MATERIAL. ANY UNUSUAL CONDITIONS SHALL BE REPORTED TO THE ATTENTION OF THE ENGINEER.

6. CONTRACTOR SHALL CLEAN AND REMOVE DEBRIS AND SEDIMENT DEPOSITED ON PUBLIC STREETS, SIDEWALKS, ADJACENT AREAS, OR OTHER PUBLIC WAYS DUE TO CONSTRUCTION.

7. CONTRACTOR SHALL INCORPORATE PROVISIONS AS NECESSARY IN CONSTRUCTION TO PROTECT EXISTING STRUCTURES, PHYSICAL FEATURES, AND MAINTAIN SITE STABILITY DURING CONSTRUCTION. CONTRACTOR SHALL RESTORE ALL AREAS TO ORIGINAL CONDITION AND AS DIRECTED BY DESIGN DRAWINGS.

8. SITE CONTRACTOR SHALL OBTAIN ALL REQUIRED PERMITS PRIOR TO CONSTRUCTION.

9. ALL EROSION AND SEDIMENT CONTROL MEASURES SHALL BE INSTALLED IN ACCORDANCE WITH "MAINE EROSION AND SEDIMENT CONTROL BMPS" PUBLISHED BY THE BUREAU OF LAND AND WATER QUALITY OF THE MAINE DEPARTMENT OF ENVIRONMENTAL PROTECTION, MARCH 2003 OR LATEST EDITION. IT SHALL BE THE RESPONSIBILITY OF THE CONTRACTOR TO POSSESS A COPY OF THE EROSION CONTROL PLAN AT ALL TIMES.

10. THE CONTRACTOR IS HEREBY CAUTIONED THAT ALL SITE FEATURES SHOWN HEREON ARE BASED ON FIELD OBSERVATIONS BY THE SURVEYOR AND BY INFORMATION PROVIDED BY UTILITY COMPANIES. THE INFORMATION IS NOT TO BE RELIED ON AS BEING EXACT OR COMPLETE. THE CONTRACTOR SHALL CONTACT DIG SAFE (811) AT LEAST THREE (3) BUT NOT MORE THAN THIRTY (30) DAYS PRIOR TO COMMENCEMENT OF EXCAVATION OR DEMOLITION TO VERIFY HORIZONTAL AND VERTICAL LOCATION OF ALL UTILITIES.

11. CONTRACTOR SHALL BE AWARE THAT DIG SAFE ONLY NOTIFIES ITS "MEMBER" UTILITIES ABOUT THE DIG. WHEN NOTIFIED, DIG SAFE WILL ADVISE CONTRACTOR OF MEMBER UTILITIES IN THE AREA. CONTRACTOR IS RESPONSIBLE FOR IDENTIFYING AND CONTACTING NON-MEMBER UTILITIES DIRECTLY. NON-MEMBER UTILITIES MAY INCLUDE TOWN OR CITY WATER AND SEWER DISTRICTS AND SMALL LOCAL UTILITIES, AS WELL AS USG PUBLIC WORKS SYSTEMS.

12. CONTRACTORS SHALL BE RESPONSIBLE FOR COMPLIANCE WITH THE REQUIREMENTS OF 23 MRSA 3360-A. IT SHALL BE THE RESPONSIBILITY OF THE CONTRACTOR TO COORDINATE WITH THE APPROPRIATE UTILITIES TO OBTAIN AUTHORIZATION PRIOR TO RELOCATION OF ANY EXISTING UTILITIES WHICH CONFLICT WITH THE PROPOSED IMPROVEMENTS SHOWN ON THESE PLANS. IF A UTILITY CONFLICT ARISES, THE CONTRACTOR SHALL IMMEDIATELY NOTIFY THE OWNER, THE MUNICIPALITY AND APPROPRIATE UTILITY COMPANY PRIOR TO PROCEEDING WITH ANY RELOCATION.

13. ALL PAVEMENT MARKINGS AND DIRECTIONAL SIGNAGE SHOWN ON THE PLAN SHALL CONFORM TO THE MANUAL OF UNIFORM TRAFFIC CONTROL DEVICES (MUTCD) STANDARDS.

14. ALL PAVEMENT JOINTS SHALL BE SAWCUT PRIOR TO PAVING TO PROVIDE A DURABLE AND UNIFORM JOINT.

15. NO HOLES, TRENCHES OR STRUCTURES SHALL BE LEFT OPEN OVERNIGHT IN ANY EXCAVATION ACCESSIBLE TO THE PUBLIC OR IN PUBLIC RIGHTS-OF-WAY.

16. ALL WORK WITHIN THE PUBLIC RIGHT-OF-WAY SHALL REQUIRE A M.D.O.T. PERMIT AS WELL AS PERMITS FROM THE TOWN AS APPLICABLE.

17. THE PROPOSED LIMITS OF CLEARING SHOWN HEREON ARE APPROXIMATE BASED UPON THE PROPOSED LIMITS OF SITE GRADING. THE APPLICANT RESERVES THE RIGHT TO PERFORM NORMAL FOREST MANAGEMENT ACTIVITIES OUTSIDE OF THE CLEARING LIMIT AS SHOWN. TREE REMOVAL OUTSIDE OF THE LIMITS OF CLEARING MAY BE NECESSARY TO REMOVE DEAD OR DYING TREES OR TREE LIMBS. THIS REMOVAL IS DUE TO POTENTIAL SAFETY HAZARDS AND TO PROMOTE PROPER FOREST GROWTH.

18. IMMEDIATELY UPON COMPLETION OF CUTS/FILLS, THE CONTRACTOR SHALL STABILIZE DISTURBED AREAS IN ACCORDANCE WITH EROSION CONTROL NOTES AND AS SPECIFIED ON PLANS.

19. THE CONTRACTOR SHALL BE FULLY AND SOLELY RESPONSIBLE FOR THE REMOVAL, REPLACEMENT AND RECTIFICATION OF ALL DAMAGED AND DEFECTIVE MATERIAL AND WORKMANSHIP IN CONNECTION WITH THE CONTRACT WORK. THE CONTRACTOR SHALL REPLACE OR REPAIR AS DIRECTED BY THE OWNER ALL SUCH DAMAGED OR DEFECTIVE MATERIALS WHICH APPEAR WITHIN A PERIOD OF ONE YEAR FROM THE DATE OF SUBSTANTIAL COMPLETION.

20. ALL WORK PERFORMED BY THE GENERAL CONTRACTOR AND/OR TRADE SUBCONTRACTOR SHALL CONFORM TO THE REQUIREMENTS OF LOCAL, STATE OR FEDERAL LAWS, AS WELL AS ANY OTHER GOVERNING REQUIREMENTS, WHETHER OR NOT SPECIFIED ON THE DRAWINGS.

21. WHERE THE TERMS "APPROVED EQUAL", "OTHER APPROVED", "EQUAL TO", "ACCEPTABLE" OR OTHER GENERAL QUALIFYING TERMS ARE USED IN THESE NOTES, IT SHALL BE UNDERSTOOD THAT REFERENCE IS MADE TO THE RULING AND JUDGMENT OF SEBAGO TECHNICS, INC.

22. THE GENERAL CONTRACTOR SHALL PROVIDE ALL NECESSARY PROTECTION FOR THE WORK UNTIL TURNED OVER TO THE OWNER.

23. THE GENERAL CONTRACTOR SHALL MAINTAIN A CURRENT AND COMPLETE SET OF CONSTRUCTION DRAWINGS ON SITE DURING ALL PHASES OF CONSTRUCTION FOR USE OF ALL TRADES.

24. THE CONTRACTOR SHALL TAKE FULL RESPONSIBILITY FOR ANY CHANGES AND DEVIATION OF APPROVED PLANS NOT AUTHORIZED BY THE ARCHITECT/ENGINEER AND/OR CLIENT/OWNER.

25. DETAILS ARE INTENDED TO SHOW END RESULT OF DESIGN. ANY MODIFICATION TO SUIT FIELD DIMENSION AND CONDITION SHALL BE SUBMITTED TO THE ENGINEER FOR REVIEW AND APPROVAL PRIOR TO ANY WORK.

26. BEFORE THE FINAL ACCEPTANCE OF THE PROJECT, THE CONTRACTOR SHALL REMOVE ALL EQUIPMENT AND MATERIALS, REPAIR OR REPLACE PRIVATE OR PUBLIC PROPERTY WHICH MAY HAVE BEEN DAMAGED OR DESTROYED DURING CONSTRUCTION, CLEAN THE AREAS WITHIN AND ADJACENT TO THE PROJECT WHICH HAVE BEEN OBSTRUCTED BY HIS/HER OPERATIONS, AND LEAVE THE PROJECT AREA NEAT AND PRESENTABLE.

27. ALL SUBSURFACE UTILITY LINES SHOWN HEREON ARE BASED SOLELY ON THE FIELD LOCATION OF VISIBLE STRUCTURES, SMH'S, CB'S, HYDRANTS, ETC.. IN CONJUNCTION WITH DESIGN AND OR AS-BUILT PLANS SUPPLIED TO SEBAGO TECHNICS INC. BY OTHERS. PRIOR TO ANY CONSTRUCTION, EXCAVATION, TEST BORINGS, DRILLING, ETC.. DIG SAFE MUST BE NOTIFIED AND A SITE IDENTIFICATION NUMBER ALONG WITH A SAFE TO DIG DATE OBTAINED. THE SITE CONTRACTOR SHALL BE RESPONSIBLE FOR FIELD VERIFYING THE LOCATION, DEPTH AND MATERIAL OF ALL SUBSURFACE UTILITY LINES SHOWN HEREON AND ANY AND ALL OTHERS LOCATED ON SITE WITHIN THE CONSTRUCTION AREA.

LEGEND

EXISTING		PROPOSED
	PROPERTY LINE/R.O.W.	
	SETBACK	
	STREAM	
	EDGE PAVEMENT	
	PAVEMENT SAWCUT	
	PAVEMENT PAINT	
	CURB LINE	
	TREELINE	
120 118	CONTOURS	120
×120.00	SPOT GRADE	+120.00
	GUARD RAIL	
	HYDRANT	
	STORM DRAIN	SD
	UNDER DRAIN	UD
	CATCH BASIN	
OHU	OVERHEAD UTILITY	
	EROSION CONTROL BLANKET	
	FILTER BARRIER	FB
	RIPRAP	

SHAWN M. FRANK PE 6396

STATE OF MAINE SHAWN M. FRANK NO. 6396 LICENSED PROFESSIONAL ENGINEER 9-15-15

DESIGNED	CHECKED
DJS	SMF

REV:	BY:	DATE:	STATUS:
C	SMF	9-15-15	REVISED PER CITY COMMENTS
B	SMF	8-6-15	REVISED PER CITY COMMENTS
A	SMF	7-8-15	CITY OF PORTLAND SITE PLAN

THIS PLAN SHALL NOT BE MODIFIED WITHOUT WRITTEN PERMISSION FROM SEBAGO TECHNICS, INC. ANY ALTERATIONS, AUTHORIZED OR OTHERWISE, SHALL BE AT THE USER'S SOLE RISK AND WITHOUT LIABILITY TO SEBAGO TECHNICS, INC.

SEBAGO TECHNICS
WWW.SEBAGOTECHNICS.COM
75 John Roberts Rd. South Portland, ME 04106 Tel. 207-200-2100
250 Goddard Rd. Lewiston, ME 04240 Tel. 207-783-5656

GRADING UTILITY PLAN
OF:
MOODY'S COLLISION CENTER: PORTLAND
495 PRESUMPSCOT STREET
PORTLAND, ME 04103
FOR:
REAL ESTATE HOLDINGS, LLC
200 NARRAGANSETT STREET
GORHAM,ME 04038

PROJECT NO.	SCALE
07548	1" = 20'

SHEET 4 OF 7

07548GU.dwg, TAB:GRADING UTILITY PLAN

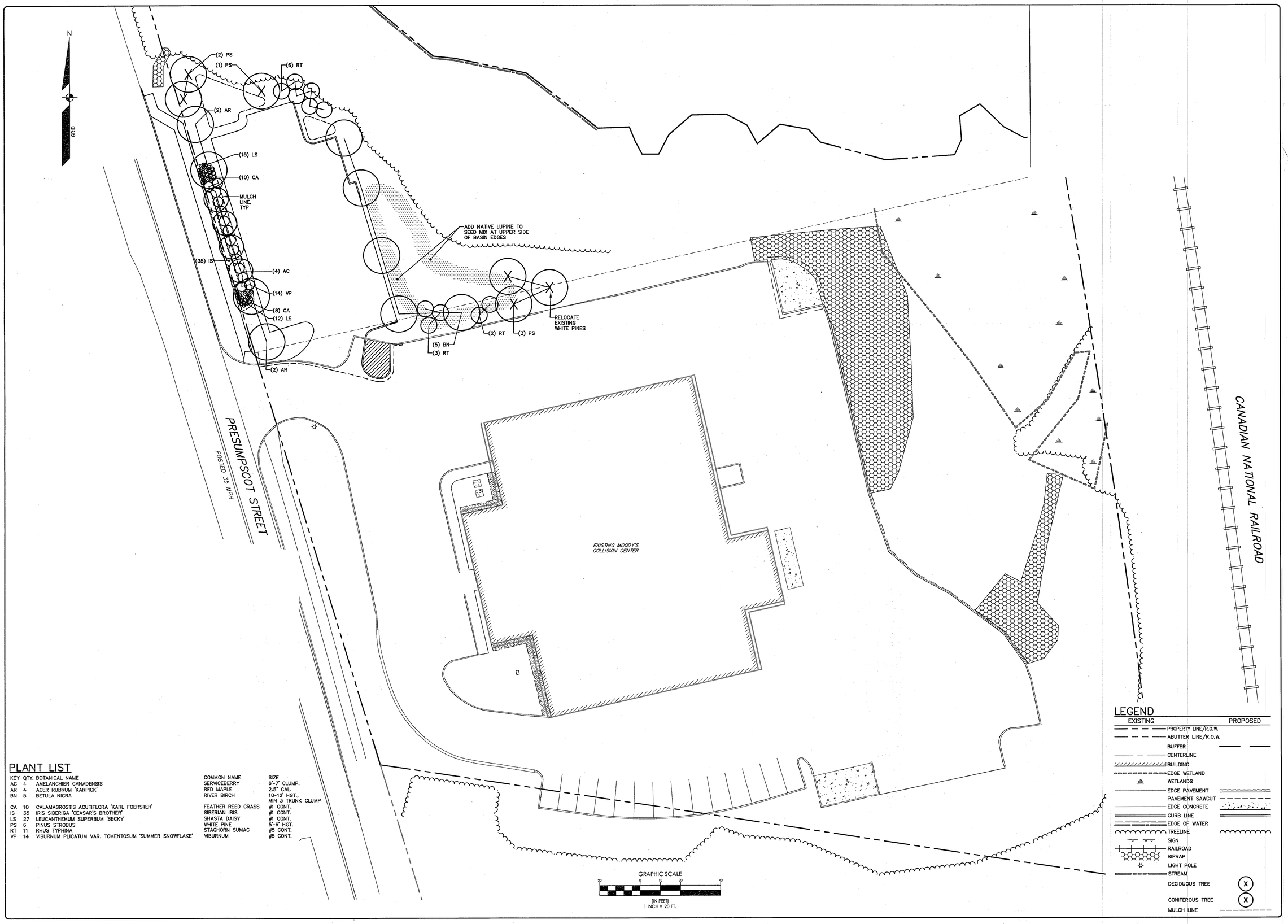

PLANT LIST

KEY	QTY.	BOTANICAL NAME	COMMON NAME	SIZE
AC	4	AMELANCHIER CANADENSIS	SERWCEBERRY	6'-7' CLUMP.
AR	4	ACER RUBRUM 'KARPICK'	RED MAPLE	2.5" CAL.
BN	5	BETULA NIGRA	RIVER BIRCH	10-12' HGT., MIN 3 TRUNK CLUMP
CA	10	CALAMAGROSTIS ACUTIFLORA 'KARL FOERSTER'	FEATHER REED GRASS	#1 CONT.
IS	35	IRIS SIBERIGA 'CEASAR'S BROTHER'	SIBERIAN IRIS	#1 CONT.
LS	27	LEUCANTHEMUM SUPERBUM 'BECKY'	SHASTA DAISY	#1 CONT.
PS	6	PINUS STROBUS	WHITE PINE	5'-6' HGT.
RT	11	RHUS TYPHINA	STAGHORN SUMAC	#5 CONT.
VP	14	VIBURNUM PLICATUM VAR. TOMENTOSUM 'SUMMER SNOWFLAKE'	VIBURNUM	#5 CONT.

LEGEND

EXISTING		PROPOSED
	PROPERTY LINE/R.O.W.	
	ABUTTER LINE/R.O.W.	
	BUFFER	
	CENTERLINE	
	BUILDING	
	EDGE WETLAND	
	WETLANDS	
	EDGE PAVEMENT	
	PAVEMENT SAWCUT	
	EDGE CONCRETE	
	CURB LINE	
	EDGE OF WATER	
	TREELINE	
	SIGN	
	RAILROAD	
	RIPRAP	
	LIGHT POLE	
	STREAM	
	DECIDUOUS TREE	
	CONIFEROUS TREE	
	MULCH LINE	

LICENSED LANDSCAPE ARCHITECT
KYLIE S. MASON
3335
STATE OF MAINE

DESIGNED	CHECKED
DJS	KSM

REV.	BY:	DATE:	STATUS:
C	SMF	9-15-15	REVISED PER CITY COMMENTS
B	SMF	8-6-15	REVISED PER CITY COMMENTS
A	SMF	7-8-15	CITY OF PORTLAND SITE PLAN

THIS PLAN SHALL NOT BE MODIFIED WITHOUT WRITTEN PERMISSION FROM SEBAGO TECHNICS, INC. ANY ALTERATIONS, AUTHORIZED OR OTHERWISE, SHALL BE AT THE USER'S SOLE RISK AND WITHOUT LIABILITY TO SEBAGO TECHNICS, INC.

SEBAGO TECHNICS
WWW.SEBAGOTECHNICS.COM
75 John Roberts Rd.
Suite A
South Portland, ME 04106
Tel. 207-200-2100
250 Goddard Rd.
Suite 1
Lewiston, ME 04240
Tel. 207-783-5656

LANDSCAPE PLAN

OF:
MOODY'S COLLISION CENTER: PORTLAND
495 PRESUMPSCOT STREET
PORTLAND, ME 04103

FOR:
REAL ESTATE HOLDINGS, LLC
200 NARRAGANSETT STREET
GORHAM,ME 04038

PROJECT NO.	SCALE
07548	1" = 20'

SHEET 5 OF 7

07548L.dwg, TAB:1

EROSION CONTROL MEASURES

PRE-CONSTRUCTION PHASE

PRIOR TO THE BEGINNING OF ANY CONSTRUCTION, SEDIMENT BARRIERS (SILT FENCE) WILL BE STAKED/INSTALLED ACROSS THE SLOPE(S), ON THE CONTOUR AT OR JUST BELOW THE LIMITS OF CLEARING OR GRUBBING, AND/OR JUST ABOVE ANY ADJACENT PROPERTY LINE OR WATERCOURSE TO PROTECT AGAINST CONSTRUCTION RELATED EROSION. THE PLACEMENT OF SEDIMENT BARRIERS SHALL BE COMPLETED IN ACCORDANCE WITH GUIDELINES ESTABLISHED IN BEST MANAGEMENT PRACTICES AND IN ACCORDANCE WITH THIS EROSION CONTROL PLAN AND DETAILS IN THIS PLAN SET. THIS NETWORK IS TO BE MAINTAINED BY THE CONTRACTOR UNTIL ALL EXPOSED SLOPES HAVE AT LEAST 85%-90% VIGOROUS PERENNIAL VEGETATIVE COVER TO PREVENT EROSION. TEMPORARY EROSION CONTROL MEASURES SHALL BE REMOVED WITHIN 30 DAYS AFTER PERMANENT STABILIZATION IS ATTAINED.

PRIOR TO ANY CLEARING OR GRUBBING, A CONSTRUCTION ENTRANCE/EXIT SHALL BE CONSTRUCTED AT THE INTERSECTION OF THE PROPOSED ENTRANCES AND EXISTING ROADWAY TO AVOID TRACKING OF MUD, DUST AND DEBRIS FROM THE SITE.

PRIOR TO CONSTRUCTION, THE CONTRACTOR SHALL PREPARE A DETAILED SCHEDULE AND MARKED UP PLAN INDICATING AREAS AND COMPONENTS OF THE WORK AND KEY DATES SHOWING DATE OF DISTURBANCE AND COMPLETION OF THE WORK. THE CONTRACTOR SHALL SCHEDULE A PRE-CONSTRUCTION MEETING WITH THE MUNICIPAL STAFF. THREE COPIES OF THE SCHEDULE AND MARKED UP PLAN SHALL BE PROVIDED TO THE MUNICIPALITY THREE DAYS PRIOR TO THE SCHEDULED PRE-CONSTRUCTION MEETING. SPECIAL ATTENTION SHALL BE GIVEN TO THE 14 DAY LIMIT OF DISTURBANCE IN THE SCHEDULE ADDRESSING TEMPORARY AND PERMANENT VEGETATION MEASURES.

CONSTRUCTION AND POST-CONSTRUCTION PHASE

AREAS UNDERGOING ACTUAL CONSTRUCTION SHALL ONLY EXPOSE THAT AMOUNT OF MINERAL SOIL NECESSARY FOR PROGRESSIVE AND EFFICIENT CONSTRUCTION . AN AREA CONSIDERED OPEN IS ANY AREA NOT STABILIZED WITH PAVEMENT, VEGETATION, MULCHING, EROSION CONTROL MATS, RIPRAP OR GRAVEL BASE ON A ROAD . OPEN AREAS SHALL BE ANCHORED WITH TEMPORARY EROSION CONTROL AS SHOWN ON THE DESIGN PLANS AND AS DESCRIBED WITHIN THIS EROSION CONTROL PLAN WITHIN 14-DAYS OF DISTURBANCE. AREAS LOCATED WITHIN 100' OF STREAMS SHALL BE ANCHORED WITH TEMPORARY EROSION CONTROL WITHIN SEVEN (7) DAYS. REFER TO WINTER EROSION CONTROL NOTES FOR THE TREATMENT OF OPEN AREAS AFTER OCTOBER 1ST OF THE CONSTRUCTION YEAR.

THE CONTRACTOR MUST INSTALL ANY ADDED MEASURES WHICH MAY BE NECESSARY TO CONTROL EROSION/SEDIMENTATION FROM THE SITE DEPENDENT UPON THE ACTUAL SITE AND WEATHER CONDITIONS. CONTINUATION OF EARTHWORK OPERATIONS ON ADDITIONAL AREAS SHALL NOT BEGIN UNTIL THE EXPOSED SOIL SURFACE ON THE AREA BEING WORKED HAS BEEN STABILIZED, IN ORDER TO MINIMIZE AREAS WITHOUT EROSION CONTROL PROTECTION.

EROSION CONTROL APPLICATIONS & MEASURES

THE PLACEMENT OF EROSION CONTROL MEASURES SHALL BE COMPLETED IN ACCORDANCE WITH GUIDELINES ESTABLISHED IN BEST MANAGEMENT PRACTICES AND IN ACCORDANCE WITH THE EROSION CONTROL PLAN AND DETAILS IN THE PLAN SET.

1. TEMPORARY MULCHING:

   ALL DISTURBED AREAS SHALL BE MULCHED WITH MATERIALS SPECIFIED BELOW PRIOR TO ANY STORM EVENT. ALL DISTURBED AREAS NOT FINAL GRADED WITHIN 14 DAYS SHALL BE MULCHED. ALSO, AREAS, WHICH HAVE BEEN TEMPORARILY OR PERMANENTLY SEEDED, SHALL BE MULCHED IMMEDIATELY FOLLOWING SEEDING. EROSION CONTROL BLANKETS ARE RECOMMENDED TO BE USED AT THE BASE OF GRASSED WATERWAYS AND ON SLOPES GREATER THAN 15%. MULCH ANCHORING SHOULD BE USED ON SLOPES GREATER THAN 5% AFTER SEPTEMBER 15TH OF THE CONSTRUCTION YEAR (SEE WINTER EROSION CONTROL NOTES).
   TYPES OF MULCH:
   HAY OR STRAW: SHALL BE APPLIED AT A RATE OF 75 LBS/1,000 S.F. (1.5 TONS PER ACRE).
   EROSION CONTROL MIX: SHALL BE PLACED EVENLY AND MUST PROVIDE 100% SOIL COVERAGE. EROSION CONTROL MIX SHALL BE APPLIED SUCH THAT THE THICKNESS ON SLOPES 3:1 OR LESS IS 2 INCHES PLUS 1/2 INCH PER 20 FEET OF SLOPE UP TO 100 FEET. THE THICKNESS ON SLOPES BETWEEN 3:1 AND 2:1 SHALL BE 4 INCHES PLUS 1/2 INCH PER 20 FEET OF SLOPE UP TO 100 FEET. THIS SHALL NOT BE USED ON SLOPES GREATER THAN 2:1.
   EROSION CONTROL BLANKET: SHALL BE INSTALLED SUCH THAT CONTINUOUS CONTACT BETWEEN THE MAT AND THE SOIL IS OBTAINED. INSTALL BLANKETS AND STAPLE IN ACCORDANCE WITH THE MANUFACTURER'S RECOMMENDATIONS.

2. SOIL STOCKPILES:

   STOCKPILES OF SOIL OR SUBSOIL SHALL BE MULCHED WITH HAY OR STRAW AT A RATE OF 75 LBS/1,000 S.F. (1.5 TONS PER ACRE) OR WITH A FOUR-INCH LAYER OF WOOD WASTE EROSION CONTROL MIX. THIS WILL BE DONE WITHIN 24 HOURS OF STOCKING AND RE-ESTABLISHED PRIOR TO ANY RAINFALL. ANY SOIL STOCKPILE WILL NOT BE PLACED (EVEN COVERED WITH HAY OR STRAW) WITHIN 100 FEET FROM ANY NATURAL RESOURCES.

3. NATURAL RESOURCES PROTECTION:

   ANY AREAS WITHIN 100 FEET FROM ANY NATURAL RESOURCES, IF NOT STABILIZED WITH A MINIMUM OF 75% MATURE VEGETATION CATCH, SHALL BE MULCHED USING TEMPORARY MULCHING (AS DESCRIBED IN PART 1. OF THIS SECTION) WITHIN 7 DAYS OF EXPOSURE OR PRIOR TO ANY STORM EVENT. SEDIMENT BARRIERS (AS DESCRIBED IN PART 4. OF THIS SECTION) SHALL BE PLACED BETWEEN ANY NATURAL RESOURCE AND THE DISTURBED AREA.
   PROJECTS CROSSING THE NATURAL RESOURCE SHALL BE PROTECTED A MINIMUM DISTANCE OF 100 FEET ON EITHER SIDE FROM THE RESOURCE.

4. SEDIMENT BARRIERS:

   PRIOR TO THE BEGINNING OF ANY CONSTRUCTION, SEDIMENT BARRIERS SHALL BE STAKED ACROSS THE SLOPE(S), ON THE CONTOUR AT OR JUST BELOW THE LIMITS OF CLEARING OR GRUBBING, AND/OR JUST ABOVE ANY ADJACENT PROPERTY LINE OR WATERCOURSE TO PROTECT AGAINST CONSTRUCTION RELATED EROSION. SEDIMENT BARRIERS SHALL BE MAINTAINED BY THE CONTRACTOR UNTIL ALL EXPOSED SLOPES HAVE AT LEAST 85%-90% VIGOROUS PERENNIAL VEGETATIVE COVER TO PREVENT EROSION.

   SILT FENCE: SHALL BE INSTALLED PER THE DETAIL ON THE PLANS. THE EFFECTIVE HEIGHT OF THE FENCE SHALL NOT EXCEED 36 INCHES. IT IS RECOMMENDED THAT SILT FENCE BE REMOVED BY CUTTING THE FENCE MATERIALS AT GROUND LEVEL SO AS TO AVOID ADDITIONAL SOIL DISTURBANCE.

   HAY BALES: SHALL BE INSTALLED PER THE DETAIL ON THE PLANS. BALES SHALL BE WIRE-BOUND OR STRING-TIED AND THESE BINDINGS MUST REMAIN PARALLEL WITH THE GROUND SURFACE DURING INSTALLATION TO PREVENT DETERIORATION OF THE BINDINGS. BALES SHALL BE INSTALLED WITHIN A MINIMUM 4 INCH DEEP TRENCH LINE WITH ENDS OF ADJACENT BALES TIGHTLY ABUTTING ONE ANOTHER.

   EROSION CONTROL MIX: SHALL BE INSTALLED PER THE DETAIL ON THE PLANS. THE MIX SHALL CONSIST PRIMARILY OF ORGANIC MATERIAL AND CONTAIN A WELL-GRADED MIXTURE OF PARTICLE SIZES AND MAY CONTAIN ROCKS LESS THAN 4 INCHES IN DIAMETER. THE MIX COMPOSITION SHALL MEET THE STANDARDS DESCRIBED WITHIN THE MDEP BEST MANAGEMENT PRACTICES. NO TRENCHING IS REQUIRED FOR INSTALLATION OF THIS BARRIER.

   CONTINUOUS CONTAINED BERM: SHALL BE INSTALLED PER THE DETAIL ON THE PLANS. THIS SEDIMENT BARRIER IS EROSION CONTROL MIX PLACED WITHIN A SYNTHETIC TUBULAR NETTING AND PERFORMS AS A STURDY SEDIMENT BARRIER THAT WORKS WELL ON HARD GROUND SUCH AS FROZEN CONDITIONS, TRAVELED AREAS OR PAVEMENT. NO TRENCHING IS REQUIRED FOR INSTALLATION OF THIS BARRIER.

5. TEMPORARY CHECK DAMS:

   SHALL BE INSTALLED PER THE DETAIL ON THE PLANS. CHECK DAMS ARE TO BE PLACED WITHIN DITCHES/ SWALES AS SPECIFIED ON THE DESIGN PLANS IMMEDIATELY AFTER FINAL GRADING. CHECK DAMS SHALL BE 2 FEET HIGH. TEMPORARY CHECK DAMS MAY BE REMOVED ONLY AFTER THE ROADWAYS ARE PAVED AND THE VEGETATED SWALE ARE ESTABLISHED WITH AT LEAST 85%-90% OF VIGOROUS PERENNIAL GROWTH. THE AREA BENEATH THE CHECK DAM MUST BE SEEDED AND MULCHED IMMEDIATELY AFTER REMOVAL OF THE CHECK DAM.

   STONE CHECK DAMS: SHOULD BE CONSTRUCTED OF 2 TO 3 INCH STONE AND PLACED SUCH THAT COMPLETE COVERAGE OF THE SWALE IS OBTAINED AND THAT THE CENTER OF THE DAM IS 6 INCHES LOWER THAT THE OUTER EDGES.

   HAY BALE CHECK DAMS: WE DO NOT RECOMMEND THE USE OF HAY BALES AS CHECK DAMS.

   MANUFACTURED CHECK DAMS: MANUFACTURED CHECK DAMS, AS SPECIFIED IN THE DETAIL ON THE PLANS, MAY BE USED IF AUTHORIZED BY THE PROPER LOCAL, STATE OR FEDERAL REGULATING AGENCIES. THESE UNITS SHALL BE INSTALLED IN ACCORDANCE WITH THE MANUFACTURE'S RECOMMENDATIONS.

6. STORMDRAIN INLET PROTECTION:

   INLET PROTECTION SHALL BE PLACED AROUND A STORMDRAIN DROP INLETOR CURB INLET PRIOR TO PERMANENT STABILIZATION OF THE IMMEDIATE AND UPSTREAM DISTURBED AREAS. THEY SHALL BE CONSTRUCTED IN A MANNER THAT WILL FACILITATE CLEAN-OUT AND DISPOSAL OF TRAPPED SEDIMENTS AND MINIMIZE INTERFERENCE WITH CONSTRUCTION ACTIVITIES. ANY RESULTANT PONDING OF WATER FROM THE PROTECTION METHOD MUST NOT CAUSE EXCESSIVE INCONVENIENCE OR DAMAGE TO ADJACENT AREAS OR STRUCTURES.

   HAY BALE DROP INLET PROTECTION: WE DO NOT RECOMMEND THE USE OF HAY BALES AS INLET PROTECTION.

   CONCRETE BLOCK AND STONE INLET SEDIMENT FILTER (DROP OR CURB INLET): SHALL BE INSTALLED PER THE DETAIL ON THE PLANS. THE HEIGHT OF THE CONCRETE BLOCK BARRIER CAN VARY BUT MUST BE BETWEEN 12 AND 24 INCHES TALL. A MINIMUM OF 1 INCH CRUSHED STONE SHALL BE USED.

   MANUFACTURED SEDIMENT BARRIERS AND FILTER (DROP OR CURB INLET): MANUFACTURED FILTERS, AS SPECIFIED IN THE DETAIL ON THE PLANS, MAY BE USED IF INSTALLED IN ACCORDANCE WITH THE MANUFACTURER'S RECOMMENDATIONS.

7. STABILIZED CONSTRUCTION ENTRANCE/EXIT:

   PRIOR TO CLEARING AND/OR GRUBBING THE SITE A STABILIZED CONSTRUCTION ENTRANCE/EXIT SHALL BE CONSTRUCTED WHEREVER TRAFFIC WILL EXIT THE CONSTRUCTION SITE ONTO A PAVED ROADWAY IN ORDER TO MINIMIZE THE TRACKING OF SEDIMENT AND DEBRIS FROM THE CONSTRUCTION SITE ONTO PUBLIC ROADWAYS. THE ENTRANCES AND ADJACENT ROADWAY AREAS SHALL BE PERIODICALLY SWEPT OR WASHED TO FURTHER MINIMIZE THE TRACKING OF MUD, DUST OR DEBRIS FROM THE CONSTRUCTION AREA. STABILIZED CONSTRUCTION EXITS SHALL BE CONSTRUCTED IN AREAS SPECIFIED ON THE PLANS AND AS DETAILED ON THE PLANS.

8. DUST CONTROL:

   DUST CONTROL DURING CONSTRUCTION SHALL BE ACHIEVED BY THE USE OF A WATERING TRUCK TO PERIODICALLY SPRINKLE THE EXPOSED ROADWAY AREAS AS NECESSARY TO REDUCE DUST DURING THE DRY MONTHS. APPLYING OTHER DUST CONTROL PRODUCTS SUCH AS CALCIUM CHLORIDE OR OTHER MANUFACTURED PRODUCTS ARE ALLOWED IF AUTHORIZED BY THE PROPER LOCAL, STATE AND/OR FEDERAL REGULATING AGENCIES. HOWEVER, IT IS THE CONTRACTOR'S ULTIMATE RESPONSIBILITY TO MITIGATE DUST AND SOIL LOSS FROM THE SITE.

9. TEMPORARY VEGETATION:

   TEMPORARY VEGETATION SHALL BE APPLIED TO DISTURBED AREAS THAT WILL NOT RECEIVE FINAL GRADING FOR PERIODS UP TO 12 MONTHS. THIS PROCEDURE SHOULD BE USED EXTENSIVELY IN AREAS ADJACENT TO NATURAL RESOURCES. SEEDBED PREPARATION AND APPLICATION OF SEED SHALL BE CONDUCTED AS INDICATED IN THE PERMANENT VEGETATION SECTION OF THIS NARRATIVE. SPECIFIC SEEDS (FAST GROWING AND SHORT LIVING) SHALL BE SELECTED FROM THE MAINE EROSION AND SEDIMENT CONTROL BMP MANUAL DATED 3/2003 OR LATER. ALTERNATIVE EROSION CONTROL MEASURES SHOULD BE USED IF SEEDING CAN NOT BE DONE BEFORE SEPTEMBER 15TH OF THE CONSTRUCTION YEAR.

10. PERMANENT VEGETATION:

   REVEGETATION MEASURES SHALL COMMENCE IMMEDIATELY UPON COMPLETION OF FINAL GRADING OF AREAS TO BE LOAMED AND SEEDED. THE APPLICATION OF SEED SHALL BE CONDUCTED BETWEEN APRIL 1ST AND OCTOBER 1ST OF THE CONSTRUCTION YEAR, PLEASE REFER TO THE WINTER EROSION CONTROL NOTES FOR MORE DETAIL. REVEGETATION MEASURES SHALL CONSIST OF THE FOLLOWING:

SEEDBED PREPARATION:

A. FOUR (4) INCHES OF LOAM SHALL BE SPREAD OVER DISTURBED AREAS AND SMOOTHED TO A UNIFORM SURFACE. LOAM SHALL BE FREE OF SUBSOIL, CLAY LUMPS, STONES AND OTHER OBJECTS OVER 2 INCHES OR LARGER IN ANY DIMENSION, AND WITHOUT WEEDS, ROOTS OR OTHER OBJECTIONABLE MATERIAL.

B. SOILS TESTS SHALL BE TAKEN AT THE TIME OF SOIL STRIPPING TO DETERMINE FERTILIZATION REQUIREMENTS. SOILS TESTS SHALL BE TAKEN PROMPTLY AS TO NOT INTERFERE WITH THE 14-DAY LIMIT ON SOIL EXPOSURE. BASED UPON TEST RESULTS, SOIL AMENDMENTS SHALL BE INCORPORATED INTO THE SOIL PRIOR TO FINAL SEEDING. IN LIEU OF SOIL TESTS, SOIL AMENDMENTS MAY BE APPLIED AS FOLLOWS:

ITEM	APPLICATION RATE
10-20-20 FERTILIZER (N-P205-K20 OR EQUAL)	18.4 LBS./1,000 S.F.
GROUND LIMESTONE (50% CALCIUM & MAGNESIUM OXIDE)	138 LBS./1,000 S.F.

C. WORK LIME AND FERTILIZER INTO THE SOIL AS NEARLY AS PRACTICAL TO A DEPTH OF 4 INCHES WITH PROPER EQUIPMENT. ROLL THE AREA TO FIRM THE SEEDBED EXCEPT ON CLAY OR SILTY SOILS OR COARSE SAND.

APPLICATION OF SEED:

A. SEEDING: SHALL BE CONDUCTED BETWEEN APRIL 1ST AND OCTOBER 1ST OF THE CONSTRUCTION YEAR. GENERALLY A SEED MIXTURE MAY BE APPLIED AS FOLLOWS: (MDEP SEED MIX 2 IS DISPLAYED)

SEED TYPE	APPLICATION RATE
CREEPING RED FESCUE	0.46 LBS/1,000 S.F. (20 LBS/ACRE)
REDTOP	0.05 LBS/1,000 S.F. (2 LBS/ACRE)
TALL FESCUE	0.46 LBS/1,000 S.F. (20 LBS/ACRE)
TOTAL:	0.97 LBS/1,000 S.F. (42 LBS/ACRE)

NOTE: A SPECIFIC SEED MIXTURE SHOULD BE CHOSEN TO MATCH THE SOILS CONDITION OF THE SITE. VARIOUS AGENCIES CAN RECOMMEND SEED MIXTURES. MDEP RECOMMENDED SEED MIXTURES ARE IN THE EROSION AND SEDIMENT CONTROL BMP MANUAL DATED 3/2003 OR LATER.

B. HYDROSEEDING: SHALL BE CONDUCTED ON PREPARED AREAS WITH SLOPES LESS THAN 2:1. LIME AND FERTILIZER MAY BE APPLIED SIMULTANEOUSLY WITH THE SEED. RECOMMENDED SEEDING RATES MUST BE INCREASED BY 10% WHEN HYDROSEEDING.

C. MULCHING: SHALL COMMENCE IMMEDIATELY AFTER SEED IS APPLIED. REFER TO THE TEMPORARY MULCHING SECTION OF THIS NARRATIVE FOR DETAILS.

SODDING:

FOLLOWING SEEDBED PREPARATION, SOD CAN BE APPLIED IN LIEU OF SEEDING IN AREAS WHERE IMMEDIATE VEGETATION IS MOST BENEFICIAL SUCH AS DITCHES, AROUND STORMWATER DROP INLETS AND AREAS OF AESTHETIC VALUE. SOD SHOULD BE LAID AT RIGHT ANGLES TO THE DIRECTION OF FLOW, STARTING AT THE LOWEST ELEVATION. SOD SHOULD BE ROLLED OR TAMPED DOWN TO EVEN OUT THE JOINTS ONCE LAID DOWN. WHERE FLOW IS PREVALENT THE SOD MUST BE PROPERLY ANCHORED DOWN. IRRIGATE THE SOD IMMEDIATELY AFTER INSTALLATION. IN MOST CASES, SOD CAN BE ESTABLISHED BETWEEN APRIL 1ST AND NOVEMBER 15TH OF THE CONSTRUCTION YEAR, HOWEVER, REFER TO THE WINTER EROSION CONTROL NOTES FOR ANY ACTIVITIES AFTER OCTOBER 1ST.

TRENCH DEWATERING AND TEMPORARY STREAM DIVERSION:

WATER FROM CONSTRUCTION TRENCH DEWATERING OR TEMPORARY STREAM DIVERSION WILL PASS FIRST THROUGH A FILTER BAG OR SECONDARY CONTAINMENT STRUCTURE (E.G. HAY BALE LINED POOL) PRIOR TO DISCHARGE. THE DISCHARGE SITE SHALL BE SELECTED TO AVOID FLOODING AND SEDIMENT DISCHARGES TO A PROTECTED RESOURCE. IN NO CASE SHALL THE FILTER BAG OR CONTAINMENT STRUCTURE BE LOCATED WITHIN 100 FEET OF A PROTECTED NATURAL RESOURCE.

STANDARDS FOR TIMELY STABILIZATION:

STANDARD FOR THE TIMELY STABILIZATION OF DISTURBED SLOPES -- THE CONTRACTOR WILL CONSTRUCT AND STABILIZE STONE-COVERED SLOPES BY NOVEMBER 15. THE CONTRACTOR WILL SEED AND MULCH ALL SLOPES TO BE VEGETATED BY SEPTEMBER 15. THE MDEP WILL CONSIDER ANY AREA HAVING A GRADE GREATER THAN 15% (6.67H:1V) TO BE A SLOPE. IF THE CONTRACTOR FAILS TO STABILIZE ANY SLOPE TO BE VEGETATED BY SEPTEMBER 15, THEN THE CONTRACTOR WILL TAKE ONE OF THE FOLLOWING ACTIONS TO STABILIZE THE SLOPE FOR LATE FALL AND WINTER.

A. STABILIZE THE SOIL WITH TEMPORARY VEGETATION AND EROSION CONTROL MATS -- BY OCTOBER 1 THE CONTRACTOR WILL SEED THE DISTURBED SLOPE WITH WINTER RYE AT A SEEDING RATE OF 3 POUNDS PER 1,000 SQUARE FEET AND APPLY EROSION CONTROL MATS OVER THE MULCHED SLOPE. THE CONTRACTOR WILL MONITOR GROWTH OF THE RYE OVER THE NEXT 30 DAYS. IF THE RYE FAILS TO GROW AT LEAST THREE INCHES OR COVER AT LEAST 75% OF THE DISTURBED SLOPE BY NOVEMBER 1, THEN THE APPLICANT WILL COVER THE SLOPE WITH A LAYER OF WOOD WASTE COMPOST AS DESCRIBED IN ITEM 2(C.) OF THIS STANDARD OR WITH STONE RIPRAP AS DESCRIBED IN ITEM 2(D.) OF THIS STANDARD.
B. STABILIZE THE SLOPE WITH SOD -- THE CONTRACTOR WILL STABILIZE THE DISTURBED SLOPE WITH PROPERLY INSTALLED SOD BY NOVEMBER 15. PROPER INSTALLATION INCLUDES THE APPLICANT PINNING THE SOD ONTO THE SLOPE WITH WIRE PINS, ROLLING THE SOD TO GUARANTEE CONTACT BETWEEN THE SOD AND UNDERLYING SOIL, AND WATERING THE SOD TO PROMOTE ROOT GROWTH INTO THE DISTURBED SOIL. THE APPLICANT WILL NOT USE LATE-SEASON SOD INSTALLATION TO STABILIZE SLOPES HAVING A GRADE GREATER THAN 33% (3H:1V).
C. STABILIZE THE SLOPE WITH WOOD WASTE COMPOST -- THE CONTRACTOR WILL PLACE A SIX-INCH LAYER OF WOOD WASTE COMPOST ON THE SLOPE BY NOVEMBER 15. PRIOR TO PLACING THE WOOD WASTE COMPOST, THE APPLICANT WILL REMOVE ANY SNOW ACCUMULATION ON THE DISTURBED SLOPE. THE APPLICANT WILL NOT USE WOOD WASTE COMPOST TO STABILIZE SLOPES HAVING GRADES GREATER THAN 50% (2H:1V) OR HAVING GROUNDWATER SEEPS ON THE SLOPE FACE.
D. STABILIZE THE SLOPE WITH STONE RIPRAP -- THE CONTRACTOR WILL PLACE A LAYER OF STONE RIPRAP ON THE SLOPE BY NOVEMBER 15. THE APPLICANT WILL HIRE A REGISTERED PROFESSIONAL ENGINEER TO DETERMINE THE STONE SIZE NEEDED FOR STABILITY AND TO DESIGN A FILTER LAYER FOR UNDERNEATH THE RIPRAP.

STANDARD FOR THE TIMELY STABILIZATION OF DISTURBED SOILS -- BY SEPTEMBER 15 THE CONTRACTOR WILL SEED AND MULCH ALL DISTURBED SOILS ON AREAS HAVING A SLOPE LESS THAN 15%. IF THE CONTRACTOR FAILS TO STABILIZE THESE SOILS BY THIS DATE, THEN THE CONTRACTOR WILL TAKE ONE OF THE FOLLOWING ACTIONS TO STABILIZE THE SOIL FOR LATE FALL AND WINTER.

A. STABILIZE THE SOIL WITH TEMPORARY VEGETATION -- BY OCTOBER 1 THE CONTRACTOR WILL SEED THE DISTURBED SOIL WITH WINTER RYE AT A SEEDING RATE OF 3 POUNDS PER 1000 SQUARE FEET, LIGHTLY MULCH THE SEEDED SOIL WITH HAY OR STRAW AT 75 POUNDS PER 1000 SQUARE FEET, AND ANCHOR THE MULCH WITH PLASTIC NETTING. THE APPLICANT WILL MONITOR GROWTH OF THE RYE OVER THE NEXT 30 DAYS. IF THE RYE FAILS TO GROW AT LEAST THREE INCHES OR COVER AT LEAST 75% OF THE DISTURBED SOIL BEFORE NOVEMBER 15, THEN THE APPLICANT WILL MULCH THE AREA FOR OVER-WINTER PROTECTION AS DESCRIBED IN ITEM 3(C.) OF THIS STANDARD.
B. STABILIZE THE SOIL WITH SOD -- THE APPLICANT WILL STABILIZE THE DISTURBED SOIL WITH PROPERLY INSTALLED SOD BY OCTOBER 1. PROPER INSTALLATION INCLUDES THE APPLICANT PINNING THE SOD ONTO THE SOIL WITH WIRE PINS, ROLLING THE SOD TO GUARANTEE CONTACT BETWEEN THE SOD AND UNDERLYING SOIL, AND WATERING THE SOD TO PROMOTE ROOT GROWTH INTO THE DISTURBED SOIL.
C. STABILIZE THE SOIL WITH MULCH -- BY NOVEMBER 15 THE APPLICANT WILL MULCH THE DISTURBED SOIL BY SPREADING HAY OR STRAW AT A RATE OF AT LEAST 150 POUNDS PER 1000 SQUARE FEET ON THE AREA SO THAT NO SOIL IS VISIBLE THROUGH THE MULCH. PRIOR TO APPLYING THE MULCH, THE APPLICANT WILL REMOVE ANY SNOW ACCUMULATION ON THE DISTURBED AREA. IMMEDIATELY AFTER APPLYING THE MULCH, THE APPLICANT WILL ANCHOR THE MULCH WITH PLASTIC NETTING TO PREVENT WIND FROM MOVING THE MULCH OFF THE DISTURBED SOIL.

CONSTRUCTION SCHEDULE

SITE IMPROVEMENTS WILL MOST LIKELY BEGIN IN AUGUST DEPENDING UPON FINAL PROJECT APPROVAL. THE FOLLOWING SCHEDULE IS ANTICIPATED FOR CONSTRUCTION OF THE IMPROVEMENTS.

SCHEDULE

1.	ESTIMATED CONSTRUCTION TIME:	6 WEEKS
2.	EROSION CONTROL MEASURES PLACED.	WEEK 1
3.	SITE CLEARING AND GRUBBING.	WEEK 2
4.	STORMWATER MANAGEMENT AREA CONSTRUCTION.	WEEK 3 - WEEK 5
5.	PARKING LOT EARTHWORK CONSTRUCTION.	WEEK 4
6.	FINE GRADE PARKING LOT.	WEEK 5
7.	PLACE BITUMINOUS PAVEMENTS	WEEK 6
8.	START FINAL SEEDING ON PREPARED AREAS. (DURING GROWING SEASON.)	WEEK 8
9.	BIWEEKLY MONITORING OF VEGETATIVE GROWTH.	WEEK 7
*10.	RE-SEEDING OF AREAS, IF NEEDED.	WEEK 8
*11.	REMOVAL OF EROSION CONTROL DEVICES.	UPON FINAL PROJECT COMPLETION

* DATES ARE SUBJECT TO CHANGE AT THE DISCRETION OF THE ENGINEER, DEPENDING ON CONSTRUCTION PROGRESS.

INSPECTIONS/MONITORING:

1. MAINTENANCE MEASURES SHALL BE APPLIED AS NEEDED DURING THE ENTIRE CONSTRUCTION CYCLE. AFTER EACH RAINFALL, SNOW STORM OR PERIOD OF THAWING AND RUNOFF, OR AT LEAST EVERY SEVEN (7) DAYS, THE CONTRACTOR SHALL PERFORM A VISUAL INSPECTION OF ALL INSTALLED EROSION CONTROL MEASURES. THE CONTRACTOR SHALL PERFORM REPAIRS AS NEEDED TO ALLOW CONTINUED PROPER FUNCTIONING OF THE EROSION CONTROL MEASURE. THE CONTRACTOR SHALL PROVIDE THE NECESSARY REGULATING AGENCIES WITH WRITTEN DOCUMENTATION DESCRIBING DATES OF INSPECTIONS AND NECESSARY FOLLOW-UP WORK TO MAINTAIN EROSION CONTROL MEASURES MEETING THE REQUIREMENTS OF THIS PLAN.

2. FOLLOWING THE TEMPORARY AND/OR FINAL SEEDINGS, THE CONTRACTOR SHALL INSPECT THE WORK AREA SEMIMONTHLY UNTIL THE SEEDINGS HAVE BEEN ESTABLISHED. ESTABLISHED MEANS A MINIMUM OF 85%-90% OF AREAS VEGETATED WITH VIGOROUS GROWTH. RESEEDING SHALL BE CARRIED OUT BY THE CONTRACTOR WITH FOLLOW-UP INSPECTIONS IN THE EVENT OF ANY FAILURES UNTIL VEGETATION IS ADEQUATELY ESTABLISHED.

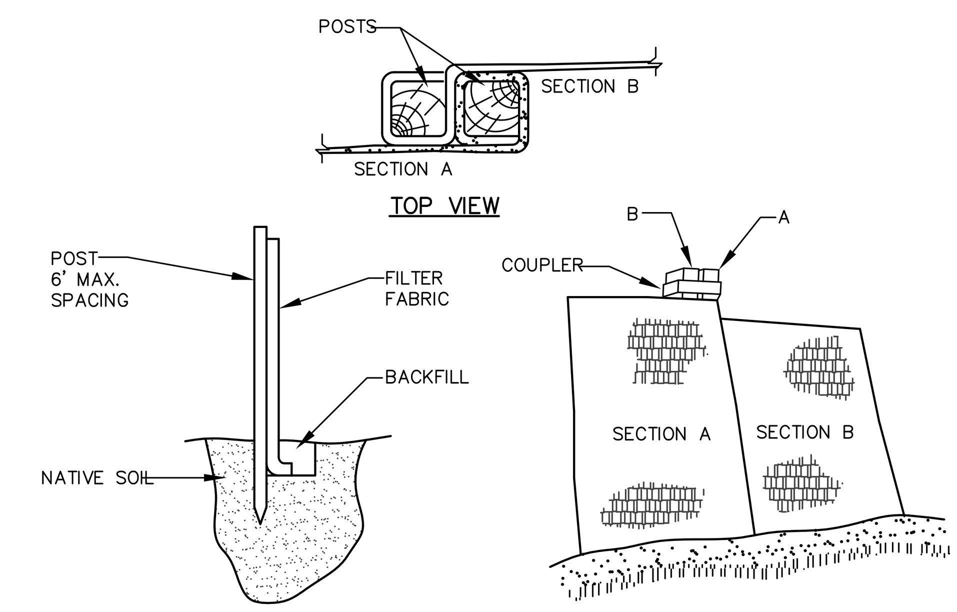

INSTALLATION:

1. EXCAVATE A 6"x 6" TRENCH ALONG THE LINE OF PLACEMENT FOR THE FILTER BARRIER.
2. UNROLL A SECTION AT A TIME AND POSITION THE POSTS AGAINST THE BACK (DOWNSTREAM) WALL OF THE TRENCH.
3. DRIVE POSTS INTO THE GROUND UNTIL APPROXIMATELY 2" OF FABRIC IS LYING ON THE TRENCH BOTTOM.
4. LAY THE TOE-IN FLAP OF FABRIC ONTO THE UNDISTURBED BOTTOM OF THE TRENCH, BACKFILL THE TRENCH AND TAMP THE SOIL. TOE-IN CAN ALSO BE ACCOMPLISHED BY LAYING THE FABRIC FLAP ON UNDISTURBED GROUND AND PILING AND TAMPING FILL AT THE BASE, BUT MUST BE ACCOMPANIED BY AN INTERCEPTION DITCH.
5. JOIN SECTION AS SHOWN ABOVE.
6. BARRIER SHALL BE MIRAFI SILT FENCE OR EQUAL.

FILTER BARRIER

NOT TO SCALE

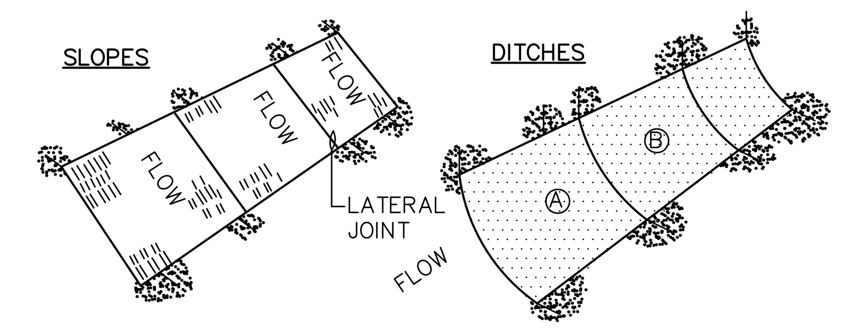

NOTES:

1. BURY THE TOP END OF THE MESH MATERIAL IN A 6" TRENCH AND BACKFILL AND TAMP TRENCHING SECURE END WITH STAPLES AT 6" SPACING, 4" DOWN FROM EXPOSED END.
2. FLOW DIRECTION JOINTS TO HAVE UPPER END OF LOWER STRIP BURIED WITH UPPER LAYERS OVERLAPPED 4" AND STAPLED. OVERLAP B OVER A.
3. LATERAL JOINTS TO HAVE 4" OVERLAP OF STRIPS. STAPLE 18" ON CENTER.
4. STAPLE OUTSIDE LATERAL EDGE 2" ON CENTER.
5. WIRE STAPLES TO BE MIN OF #11 WIRE 6" LONG AND 1-1/2" WIDE.
6. USE NORTH AMERICAN GREEN DS 150 OR APPROVED EQUAL.

EROSION CONTROL BLANKET

NOT TO SCALE

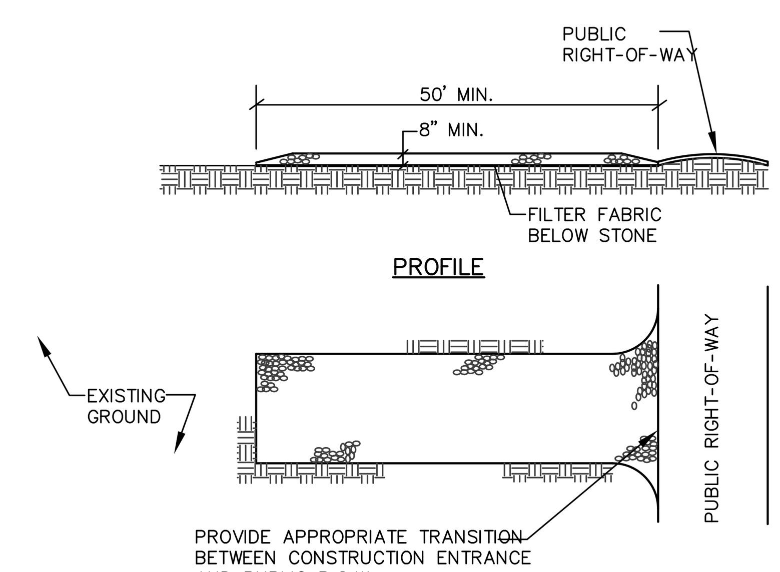

NOTES:

1. STONE SIZE- AASHTO DESIGNATION M43, SIZE NO. 2 (2 1/2" TO 1 1/2"). USE CRUSHED STONE.
2. LENGTH- AS SHOWN ON PLANS, MIN. 50 FEET.
3. THICKNESS- NOT LESS THAN EIGHT (8) INCHES.
4. WIDTH- NOT LESS THAN FULL WIDTH OF ALL POINT OF INGRESS OR EGRESS.
5. MAINTENANCE- THE ENTRANCE SHALL BE MAINTAINED IN A CONDITION WHICH WILL PREVENT TRACKING OR FLOWING OF SEDIMENT ONTO PUBLIC RIGHT-OF-WAY. THIS MAY REQUIRE PERIODIC TOP DRESSING WITH ADDITIONAL STONE AS CONDITIONS DEMAND AND REPAIR AND/OR CLEANOUT OF ANY MEASURES USED TO TRAP SEDIMENT. ALL SEDIMENT SPILLED, DROPPED, WASHED OR TRACKED ONTO PUBLIC RIGHT-OF-WAY MUST BE REMOVED IMMEDIATELY.

STABILIZED CONSTRUCTION ENTRANCE

NOT TO SCALE

SHAWN M. FRANK PE 6396

STATE OF MAINE
SHAWN M. FRANK
NO. 6396
LICENSED PROFESSIONAL ENGINEER
9-15-15

DESIGNED	CHECKED
DJS	SMF

REV:	BY:	DATE:	STATUS:
C	SMF	9-15-15	REVISED PER CITY COMMENTS
B	SMF	8-6-15	REVISED PER CITY COMMENTS
A	SMF	7-8-15	CITY OF PORTLAND SITE PLAN

THIS PLAN SHALL NOT BE MODIFIED WITHOUT WRITTEN PERMISSION FROM SEBAGO TECHNICS, INC. ANY ALTERATIONS, AUTHORIZED OR OTHERWISE, SHALL BE AT THE USER'S SOLE RISK AND WITHOUT LIABILITY TO SEBAGO TECHNICS, INC.

SEBAGO TECHNICS
WWW.SEBAGOTECHNICS.COM
75 John Roberts Rd. Suite 1A South Portland, ME 04106 Tel. 207-200-2100
250 Goddard Rd. Suite B Lewiston, ME 04240 Tel. 207-783-5656

DETAILS: PARKING LOT EXPANSION
OF:
MOODY'S COLLISION CENTER: PORTLAND
495 PRESUMPSCOT STREET
PORTLAND, ME 04103
FOR:
REAL ESTATE HOLDINGS, LLC
200 NARRAGANSETT STREET
GORHAM,ME 04038

PROJECT NO.	SCALE
07548	NTS

07548D.dwg, TAB:DETAIL-1

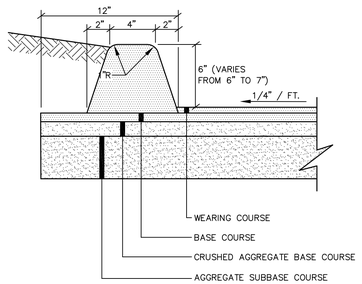

(SEE TYPICAL PAVED PARKING LOT SECTION FOR MATERIAL SPECIFICATIONS AND DEPTHS)

BITUMINOUS CURB SECTION

NOT TO SCALE

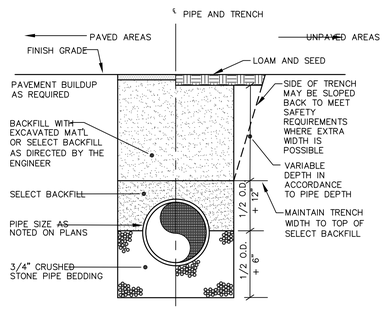

TYPICAL TRENCH SECTION

NOT TO SCALE

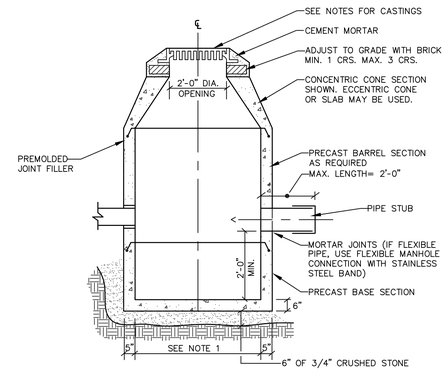

NOTES:

1. 4'-0" I.D. TYPICAL. SOME STRUCTURES MAY REQUIRE LARGER I.D. PROVIDE SHOP DRAWINGS.
2. DRAINAGE STRUCTURES TO BE DESIGNED FOR H-20 LOADING.
3. PIPE SIZES AND INVERTS AS NOTED ON PLANS.
4. CATCH BASIN FRAME AND GRATE TO BE NEENAH FOUNDRY R-2554, OR APPROVED EQUAL.

TYPICAL CATCH BASIN

NOT TO SCALE

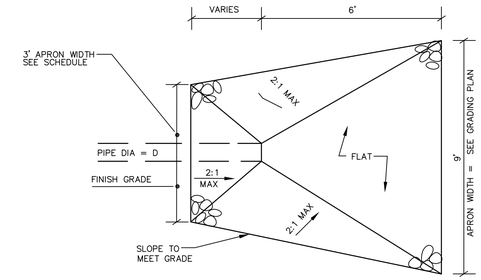

PLAN VIEW

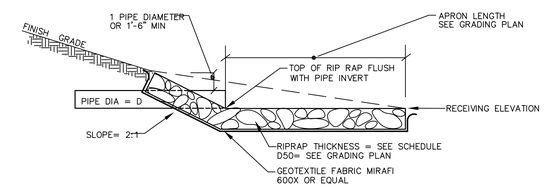

SECTION VIEW

NOTES

1. RIPRAP TO BE PROCESSED ANGULAR ROCK
2. RIPRAP GRADIATION SHALL BE A WELL GRADED MIX FROM ABOUT 1.5 TIMES D SIZE TO 25 PERCENT OF THE D SIZE
3. THE RIPRAP STONES SHALL BE CAREFULLY PLACED FROM THE TOE OF THE SLOPE UPWARD
4. STONES SHALL BE LOWERED TO THE SLOPE AND NOT BE ALLOWED TO DROP MORE THAN 12" ONTO THE GEOTEXTILE
5. THE FINISHED SURFACE SHALL BE A RELATIVELY SMOOTH, UNIFORMLY SLOPED SURFACE

RIPRAP APRON

NOT TO SCALE

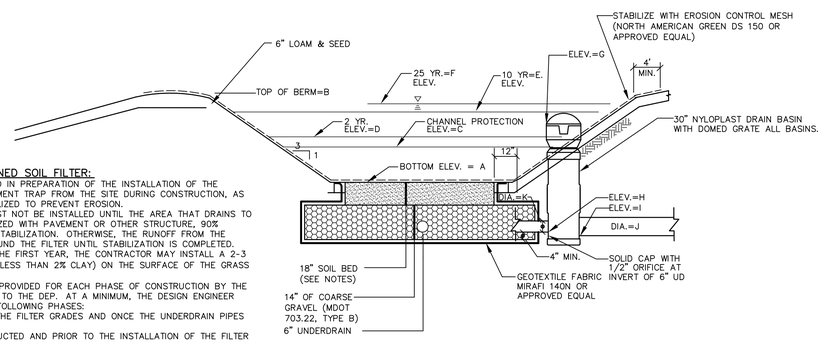

CONSTRUCTION NOTES FOR UNDERDRAINED SOIL FILTER:

1. THE AREA OF THE BASIN MAY BE EXCAVATED IN PREPARATION OF THE INSTALLATION OF THE UNDERDRAIN AND CAN BE USED FOR A SEDIMENT TRAP FROM THE SITE DURING CONSTRUCTION, AS LONG AS THE BASIN IS MULCHED AND STABILIZED TO PREVENT EROSION.
2. THE SOIL FILTER MEDIA AND VEGETATION MUST NOT BE INSTALLED UNTIL THE AREA THAT DRAINS TO THE FILTER HAS BEEN PERMANENTLY STABILIZED WITH PAVEMENT OR OTHER STRUCTURE, 90% VEGETATION COVER, OR OTHER PERMANENT STABILIZATION. OTHERWISE, THE RUNOFF FROM THE CONTRIBUTING AREA MUST BE DIVERTED AROUND THE FILTER UNTIL STABILIZATION IS COMPLETED.
3. IF VEGETATION IS NOT ESTABLISHED WITHIN THE FIRST YEAR, THE CONTRACTOR MAY INSTALL A 2-3 INCH LAYER OF SANDY LOAM TOPSOIL (WITH LESS THAN 2% CLAY) ON THE SURFACE OF THE GRASS FILTER AND RESEED/MULCH.
4. INSPECTION OF THE FILTER BASIN SHALL BE PROVIDED FOR EACH PHASE OF CONSTRUCTION BY THE DESIGN ENGINEER WITH REQUIRED REPORTING TO THE DEP. AT A MINIMUM, THE DESIGN ENGINEER SHALL INSPECT THE CONSTRUCTION AT THE FOLLOWING PHASES:
   A. AFTER PRELIMINARY CONSTRUCTION OF THE FILTER GRADES AND ONCE THE UNDERDRAIN PIPES ARE INSTALLED BUT NOT BACKFILLED.
   B. AFTER THE DRAINAGE LAYER IS CONSTRUCTED AND PRIOR TO THE INSTALLATION OF THE FILTER MEDIA.
   C. AFTER THE FILTER MEDIA HAS BEEN INSTALLED AND SEEDED.
   D. AFTER ONE YEAR TO INSPECT HEALTH OF THE VEGETATION AND MAKE CORRECTIONS, AND
   E. ALL MATERIAL USED FOR THE CONSTRUCTION OF THE FILTER BASIN SHALL BE APPROVED BY THE DESIGN ENGINEER AFTER TESTS BY A CERTIFIED LABORATORY SHOW THAT THEY ARE PASSING DEP SPECIFICATIONS.
5. THE CONTRACTOR SHALL IDENTIFY THE LOCATION OF THE SOURCE OF EACH COMPONENT OF THE FILTER MEDIA. ALL RESULTS OF THE FIELD AND LABORATORY TESTING SHALL BE SUBMITTED TO THE DESIGN ENGINEER FOR CONFIRMATION. THE CONTRACTOR SHALL.
   A. SUBMIT SAMPLES OF EACH TYPE OF MATERIAL TO BE BLENDED FOR THE MIXED FILTER MEDIA AND SAMPLES OF THE UNDERDRAIN BEDDING MATERIAL. SAMPLES MUST BE A COMPOSITE OF THREE GRABS FROM THE STOCKPILE OR PIT FACE. SAMPLE SIZE REQUIRED WILL BE DETERMINED BY THE TESTING LABORATORY.
   B. PERFORM A SIEVE ANALYSIS CONFORMING TO ASTM C136 (STANDARD TEST METHOD FOR SIEVE ANALYSIS OF FINE AND COARSE AGGREGATES, 1996A) ON EACH TYPE OF THE SAMPLE MATERIAL. THE RESULTING SOIL FILTER MEDIA MIXTURE MUST HAVE 8% TO 12% BY WEIGHT PASSING THE #200 SIEVE, A CLAY CONTENT OF LESS THAN 2% (DETERMINED BY HYDROMETER GRAIN SIZE ANALYSIS) AND HAVE 10% DRY WEIGHT OF ORGANIC MATTER.
   C. PERFORM A PERMEABILITY TEST ON THE SOIL FILTER MEDIA CONFORMING TO ASTM D2434 WITH THE MIXTURE COMPACTED TO 90-92% OF MAXIMUM DRY DENSITY BASED ON ASTM D698.

UNDERDRAINED FILTER NOTES:

1. THE SOIL BED SHALL CONSIST OF A SILTY SAND SOIL OR SOIL MIXTURE COMBINED WITH 20% TO 25% BY VOLUME OF A MODERATELY FINE SHREDDED BARK OR WOOD FIBER MULCH. THE RESULTING MIXTURE MUST HAVE NO LESS THAN 8% PASSING THE 200 SIEVE AND SHALL HAVE A CLAY CONTENT OF LESS THAN 2%. THE SAND USED IN THE MIXTURE SHALL MEET THE FOLLOWING SPECIFICATIONS:
   SIEVE 3/8" - 100 PERCENT PASSING
   SIEVE #4 - 95-100 PERCENT PASSING
   SIEVE #8 - 80-100 PERCENT PASSING
   SIEVE #16 - 50-85 PERCENT PASSING
   SIEVE #30 - 25-60 PERCENT PASSING
   SIEVE #60 - 10-30 PERCENT PASSING
   SIEVE #100 - 2-10 PERCENT PASSING
   SIEVE #200 - 0-5 PERCENT PASSING
2. COMPACTION OF THE SOIL BED MATERIAL SHALL BE AVOIDED. IF COMPACTION OCCURS, ROTOTILL AGAIN PRIOR TO SEEDING OR SODDING.

EMBANKMENT CONSTRUCTION NOTES:

1. CONSTRUCTION OF COMMON BORROW MATERIAL MEETING M.D.O.T. SPECIFICATIONS
2. PLACE BORROW MATERIAL IN 12" LIFTS COMPACTED TO 95% OF MAXIMUM
3. INSTALL RIPRAP AND EROSION CONTROL MESH WHERE SPECIFIED ON PLANS
4. LOAM, SEED, AND STABILIZE IN ACCORDANCE WITH SEDIMENTATION AND EROSION CONTROL PLAN.

POND DIMENSIONS

UNDERDRAIN GRASS FILTER	ELEVATION IN FEET									DIA (IN)	
	A	B	C	D	E	F	G	H	I	J	K
USF-1	41.00	42.00	41.71	41.75	41.76	41.77	41.75	38.60	38.60	10	6

DETENTION BASIN WITH UNDERDRAINED GRASS FILTER

NOT TO SCALE

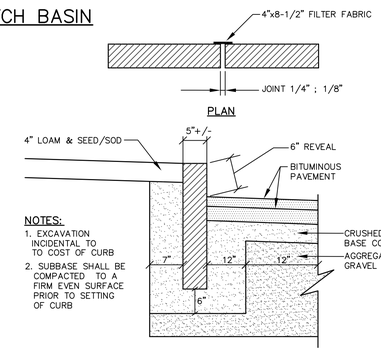

NOTES:

1. EXCAVATION INCIDENTAL TO TO COST OF CURB
2. SUBBASE SHALL BE COMPACTED TO A FIRM EVEN SURFACE PRIOR TO SETTING OF CURB

SECTION

VERTICAL GRANITE CURB

NOT TO SCALE

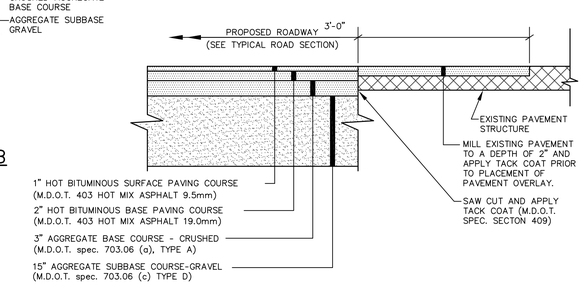

TYPICAL PAVEMENT JOINT

NOT TO SCALE

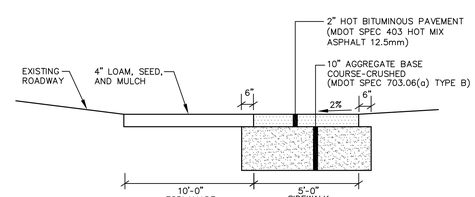

TYP. PAVED SIDEWALK DETAIL

NOT TO SCALE

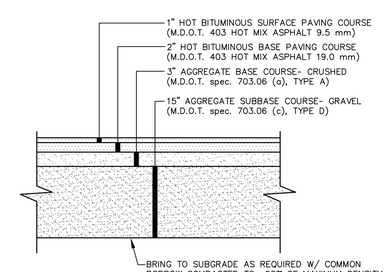

NOTES:

1. COMPACT GRAVEL SUBBASE, BASE COURSE TO 92% OF MAXIMUM DENSITY USING HEAVY ROLLER COMPACTION.
2. CONTRACTOR SHALL SET GRADE STAKES MARKING SUBBASE AND FINISH GRADE ELEVATIONS FOR CONSTRUCTION REFERENCE.
3. CONTRACTOR MAY REPLACE BITUMINOUS PAVING SECTION WITH TWO (2) 1-1/2" LIFTS OF 12.5mm SUPERPAVE MIX. SUBMIT PAVEMENT MIX DESIGN PRIOR TO CONSTRUCTION.

TYP. PAVED PARKING LOT SECTION

NOT TO SCALE

SHAWN M. FRANK PE 6396

STATE OF MAINE SHAWN M. FRANK NO. 6396 LICENSED PROFESSIONAL ENGINEER 9-15-15

DESIGNED	CHECKED
DJS	SMF

REV:	BY:	DATE:	STATUS:
C	SMF	9-15-15	REVISED PER CITY COMMENTS
B	SMF	8-6-15	REVISED PER CITY COMMENTS
A	SMF	7-8-15	CITY OF PORTLAND SITE PLAN

THIS PLAN SHALL NOT BE MODIFIED WITHOUT WRITTEN PERMISSION FROM SEBAGO TECHNICS, INC. ANY ALTERATIONS, AUTHORIZED OR OTHERWISE, SHALL BE AT THE USER'S SOLE RISK AND WITHOUT LIABILITY TO SEBAGO TECHNICS, INC.

SEBAGO TECHNICS
WWW.SEBAGOTECHNICS.COM
75 John Roberts Rd. Suite 1A South Portland, ME 04106 Tel. 207-200-2100
250 Goddard Rd. Suite B Lewiston, ME 04240 Tel. 207-783-5656

DETAILS: PARKING LOT EXPANSION
OF:
MOODY'S COLLISION CENTER: PORTLAND
495 PRESUMPSCOT STREET
PORTLAND, ME 04103
FOR:
REAL ESTATE HOLDINGS, LLC
200 NARRAGANSETT STREET
GORHAM,ME 04038

PROJECT NO.	SCALE
07548	NTS

SHEET 7 OF 7

07548D.dwg, TAB:6 - DETAIL-2