Reviewed for Code Compliance
Inspections Division
Approved with Conditions

Date: 04/15/15

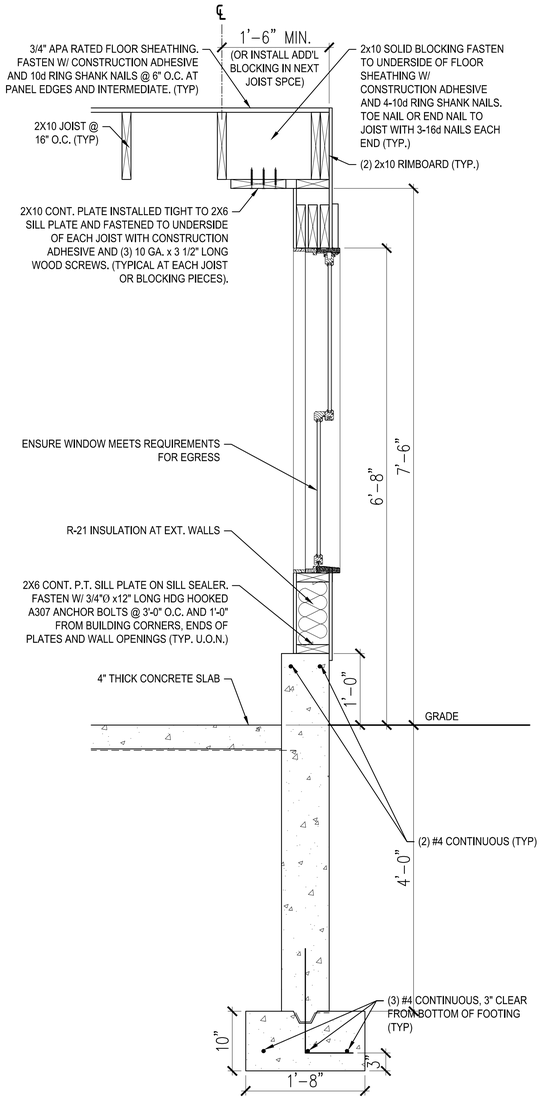

C | FOUNDATION/FLOOR FRAMING SECTION (WINDOW AT DAYLIGHT BASEMENT)
SCALE: 1"=1'-0"

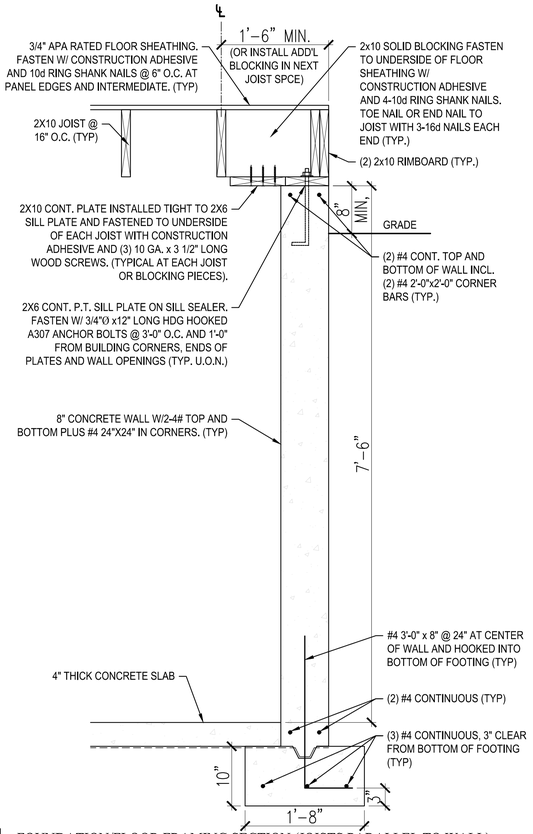

A | FOUNDATION/FLOOR FRAMING SECTION (JOISTS PARALLEL TO WALL)
SCALE: 1"=1'-0"

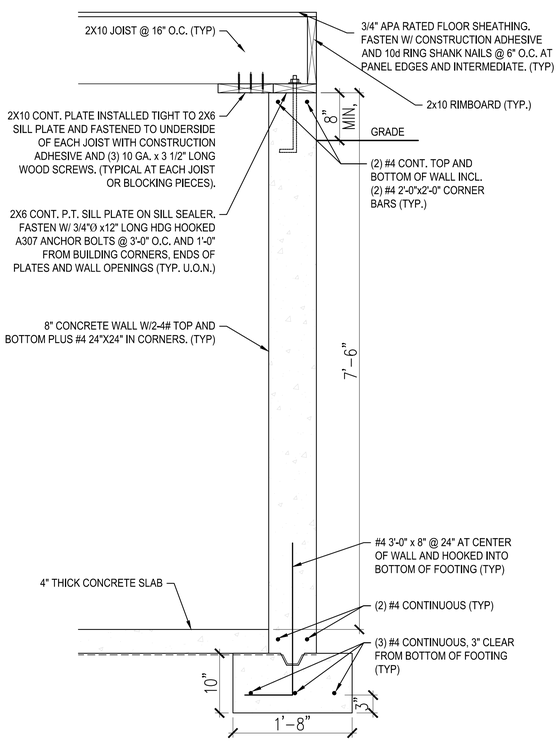

B | FOUNDATION/FLOOR FRAMING SECTION (JOISTS PERPENDICULAR TO WALL)
SCALE: 1"=1'-0"

GENERAL FOUNDATION NOTES:

1. PRESUMPTIVE SOIL BEARING CAPACITY IS 2000PSF TO BE VERIFIED BY THE G.C. IN THE FIELD.
2. PROVIDE 4" DIA. PERFORATED PVC DRAINAGE PIPES ADJACENT TO BOTTOM OF FOOTING, WRAPPED IN 1'-0" x 1'-0" CRUSHED STONE AND FILTER FABRIC. DRAIN TO A SUITABLE DISCHARGE LOCATION AWAY FROM THE BUILDING.
3. CONCRETE STRENGTH (f'c) SHALL BE 4000 PSI AT 28 DAYS FOUNDATION SHALL NOT BE BACKFILLED UNTIL 7 DAYS AFTER PLACEMENT.
4. PROVIDE 12" COMPACTED STRUCTURAL FILL OR CRUSHED STONE BENEATH ALL CONCRETE SLABS COMPACTED TO A DRY DENSITY OF AT LEAST 95% OF THE MAXIMUM IN PLACE DRY DENSITY AS DETERMINED BY THE MODIFIED PROCTOR TEST (ASTM D-1557) FOR STRUCTURAL FILL OR 100% OF THE DRY RODDED UNIT WEIGHT AS DETERMINED BY ASTM C-29 FOR CRUSHED STONE.
5. ALL FOUNDATION WALLS SHALL BE BACKFILLED WITH FREE DRAINING STRUCTURAL FILL ON BOTH SIDES OF THE WALL SIMULTANEOUSLY. THE BASEMENT FOUNDATION WALLS SHALL NOT BE BACKFILLED UNTIL THE FIRST FLOOR FRAMING IS COMPLETELY CONSTRUCTED INCLUDED ALL FRAMING MEMBERS, FLOOR SHEATHING, BLOCKING, FRAMING CONNECTORS AND CONNECTIONS TO THE FOUNDATION WALL.
6. PROVIDE 1/2" WIDE BY 1" DEEP CONTROL JOINTS IN SLAB ON A 15' x 15' (225 SQFT) MINIMUM PATTERN.

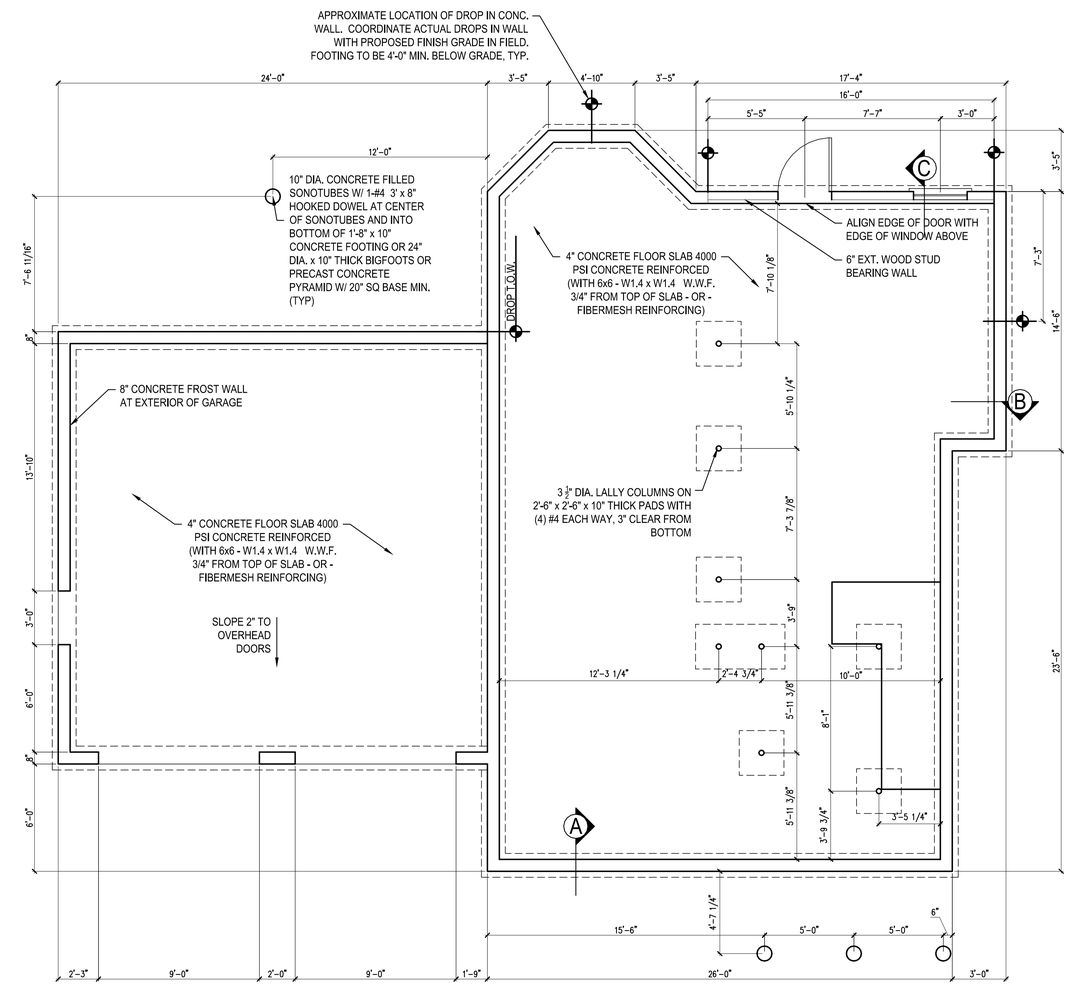

1 | FOUNDATION PLAN
SCALE: 1/4"=1'-0"

Prepared For: MICHAEL GALLI
Address

Consulting Engineer:

Architect: ARCHETYPE architects
48 Union Wharf Portland, Maine 04101
(207) 772-6022 Fax (207) 772-4056

Project: THE COLONIAL OPTION #1

Revisions: Revised 03 FEB 2015

Scale: 1/4" = 1'-0"

Date: 13 Dec 2012

FOUNDATION FRAMING AND DETAILS

S1