GENERAL NOTES:

1. All work shall be in accordance with IRC 2009, IBC Basic Building Code 2009, NFPA-70 National Electric Code, Maine State Plumbing Code, ASHRAE, U.L., NFPA Codes and all local, State and Federal requirements.

2. All applicable Federal, State and Municipal regulations shall be followed, including the Federal Department of Labor Occupational Safety and Health act.

3. All required City and State permits must be obtained before any construction begins.

4. It is the contractor's sole responsibility to determine erection procedures and sequence to ensure the safety of the building and its components during erection. This includes the addition of necessary shoring, sheeting, temporary bracing, guys or tie-downs. Such material shall remain the property of the contractor after completion of the project.

5. Structural, Mechanical, Electrical and Plumbing design and installation by others shall be performed in accordance with local, State and Federal standards.

6. All fire ratings indicated shall be continuous to underside of fire rated ceiling or underside of roof deck. Seal all openings & mechanical penetrations with approved fire safing material.

7. Building shall have approved smoke detectors in accordance with NFPA-101 Life Safety Code. Smoke detectors shall initiate alarm that is audible in the sleeping rooms of each unit.

8. HVAC installation to be in accordance with ASHRAE, NFPA-90A, OR NFPA-90B and all federal, local and State codes. Ventilation or heat equipment shall be in accordance with NFPA-91, NFPA-211, NFPA-31, NFPA-54 and NFPA-70 as applicable.

HEADER SCHEDULE	
ROUGH OPENING	HEADER SIZE
0 – 3'-0"	(3) – 2x6
3'-1" – 4'-6"	(3) – 2x8
4'-7" – 5'-8"	(3) – 2x10
5'-9" – 7'-0"	(3) – 2x12

NOTE: PROVIDE JAMBS BOTH ENDS AS FOLLOWS:
2x6 JACK PLUS 2x6 KING UP TO 4'-6" ROUGH OPENING
(2) 2x6 JACKS PLUS (2) 2x6 KINGS UP TO 7'-0" ROUGH OPENING

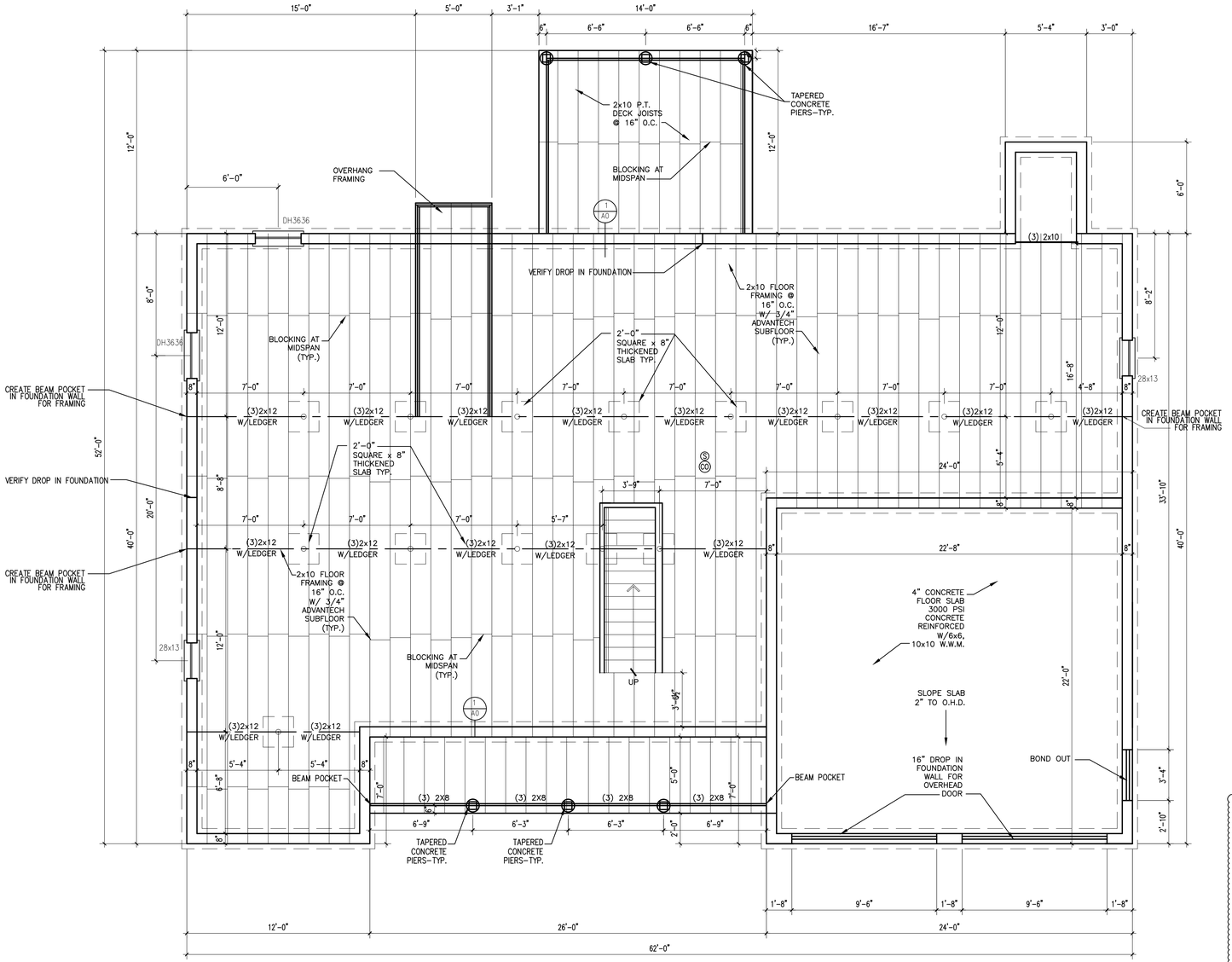

FOUNDATION/FRAMING PLAN

1/4"= 1'-0"

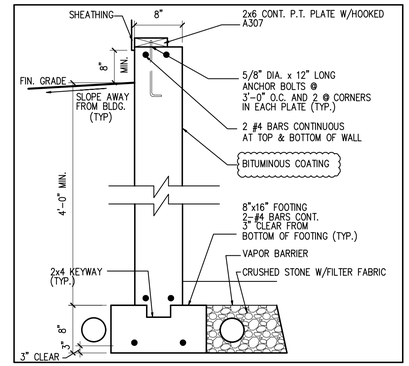

TYPICAL FOUNDATION WALL

SCALE: 1"=1'-0

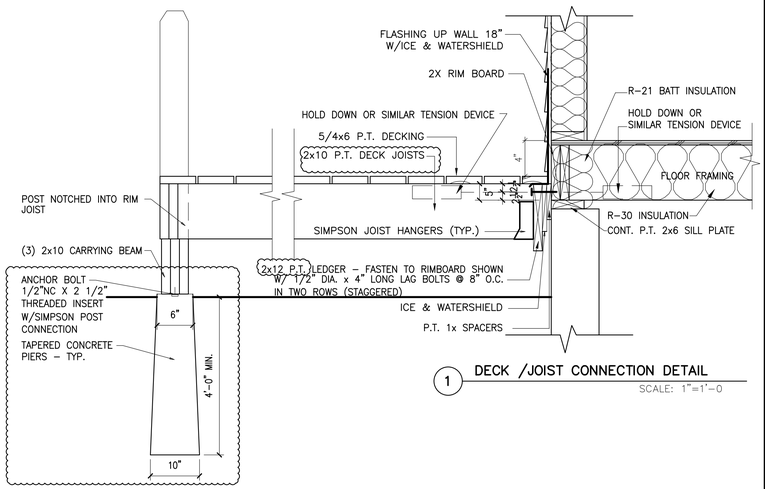

1 DECK /JOIST CONNECTION DETAIL

SCALE: 1"=1'-0

RANCH DESIGN

PORTLAND, MAINE

REVISIONS		
1	01-30-18	REVISED NOTES

DRAWN BY: DLP
CHECKED BY: DLP
DATE: 12-22-17
ISSUED:

FOUNDATION/FRAMING PLAN DETAILS

A0

SCALE: AS NOTED