Reviewed for Code Compliance Not to Exceed Approved with Conditions
Date: 05/24/16

Job	Truss	Truss Type	Qty	Ply	Pennwest Homes (P26M7X)
72209	HMC03401	HINGE MONO	1	1	26' 0" wide 7/12 hinged mono (80#)
					Designed by ATM 274

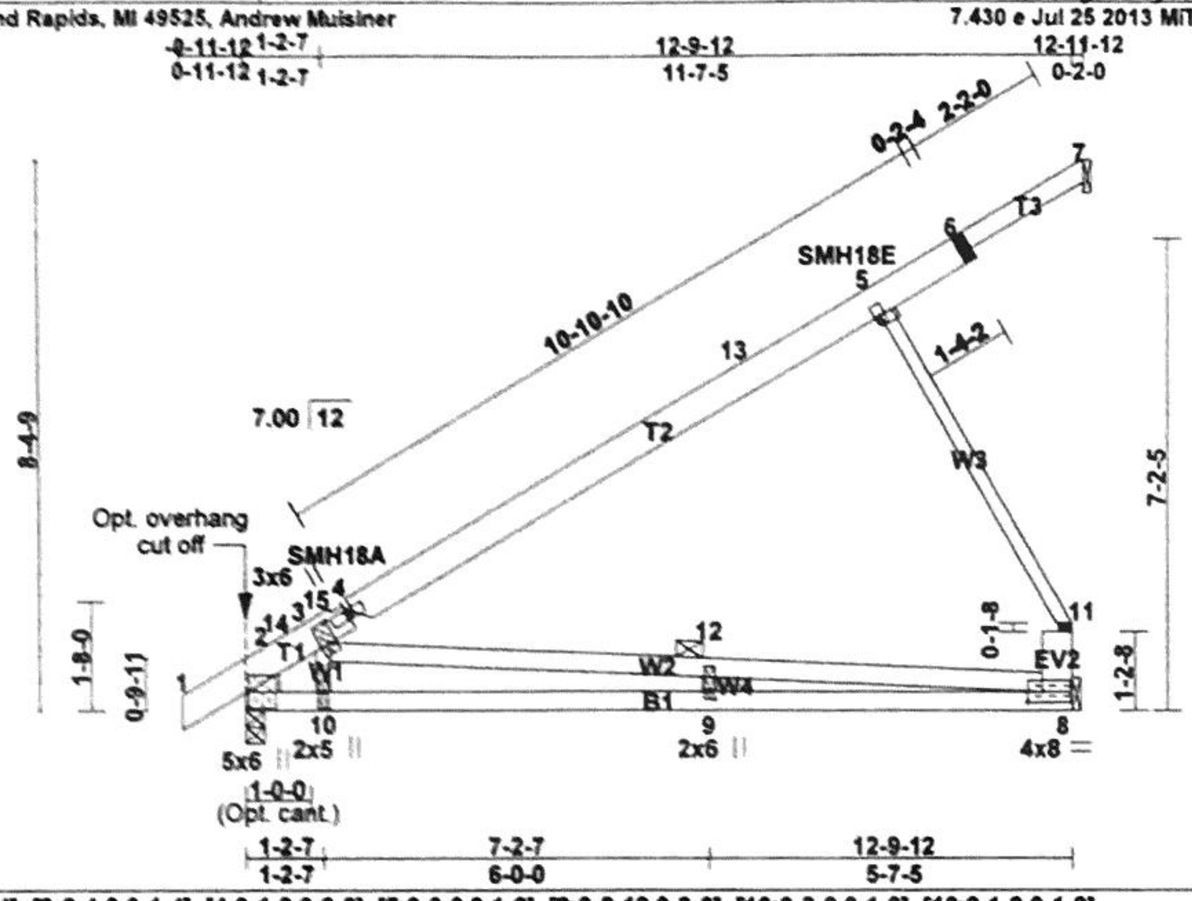

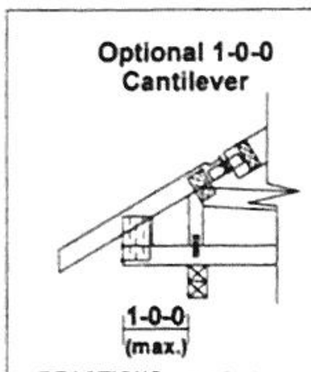

REACTIONS (lb/size)
10 = 1009/0-3-8 (min. 0-1-12)
8 = 577/Mechanical
7 = 0/Mechanical
Max Horz
10 = 345(LC 9)
7 = -196(LC 14)
Max Uplift
10 = -309(LC 9)
8 = -311(LC 9)
Max Grav
10 = 1096(LC 14)
8 = 715(LC 14)

Plate Offsets (X,Y): [2:0-3-0,0-0-4], [3:0-4-0,0-1-4], [4:0-1-0,0-0-0], [5:0-0-0,0-1-0], [8:0-2-12,0-2-0], [10:0-3-0,0-1-0], [12:0-1-8,0-1-0]

SPACING: 2-0-0		SPACING: 1-4-0		SPACING	2-0-0	CSI		DEFL	in	(loc)	l/defl	L/d	PLATES	GRIP
LOADING (psf)		LOADING (psf)		Plates Increase	1.15	TC	0.79	Vert(LL)	-0.32	8-9	>468	240	MT20	197/144
TCLL	41.0	TCLL	61.6	Lumber Increase	1.15	BC	0.83	Vert(TL)	-0.76	8-9	>197	180	MT18HS	197/144
(Ground Snow=53.3)		(Ground Snow=80.0)		Rep Stress Incr	YES	WB	0.90	Horz(TL)	0.02	8	n/a	n/a		
TCDL	7.0	TCDL	10.5	Code	IBC2009/TPI2007	(Matrix)							Weight: 60 lb	
BCLL	0.0 *	BCLL	0.0 *										FT = 0%	
BCDL	10.0	BCDL	15.0											

LUMBER
TOP CHORD 2x6 SPF No.2 *Except*
T3: 2x4 SPF No.2
BOT CHORD 2x4 SPF 1650F 1.5E
WEBS 2x3 SPF No.2 *Except*
W2: 2x4 SPF No.2, EV2: 2x6 SPF No.2

WEDGE
Left: 2x4 SPF No.2

BRACING
TOP CHORD Structural wood sheathing directly applied or 3-8-11 oc purlins, except end verticals.
BOT CHORD Rigid ceiling directly applied or 10-0-0 oc bracing.
WEBS 1 Row at midpt 3-8

REACTIONS (lb/size) 2=921/0-3-8 (min. 0-1-9), 8=663/Mechanical, 7=-0/Mechanical
Max Horz 2=345(LC 9), 7=-196(LC 14)
Max Uplift2=-253(LC 9), 8=-336(LC 9)
Max Grav 2=1000(LC 14), 8=808(LC 14)

FORCES (lb) - Maximum Compression/Maximum Tension
TOP CHORD 1-2=0/31, 2-14=-1334/7, 3-14=-1276/9, 3-15=-834/38, 4-15=-824/38, 4-13=-793/50, 5-13=-506/62, 5-6=-391/71, 6-7=-233/81, 8-11=-624/330
BOT CHORD 2-10=-389/799, 9-10=-386/800, 8-9=-386/800
WEBS 3-10=0/703, 3-12=-625/206, 8-12=-633/203, 5-11=-713/378, 9-12=0/82

REQUIRED FIELD JOINT CONNECTIONS - Maximum Compression (lb)/ Maximum Tension (lb)/ Maximum Shear (lb)/ Maximum Moment (lb-in)
6=300/76/117/0, 11=713/378/346/0

NOTES
1) Dado: 0-2-8 length x 0-0-12 deep dado, 0-0-0 to right edge from joint 4 on the top face.
2) Wind: ASCE 7-05; 100mph @24in o.c.; TCDL=2.8psf; BCDL=4.0psf; (Alt. 122mph @16in o.c.; TCDL=4.2psf; BCDL=6.0psf); h=30ft; Cat. II; Exp C; enclosed; MWFRS (low-rise) gable end zone and C-C Exterior(2) zone;C-C for members and forces & MWFRS for reactions shown; Lumber DOL=1.60 plate grip DOL=1.60
3) TCLL: ASCE 7-05; Pg=53.3 psf (ground snow); Ps=41.0 psf (roof snow); Category II; Exp C; Partially Exp.; Ct=1.1
4) Roof design snow load has been reduced to account for slope.
5) Unbalanced snow loads have been considered for this design.
6) This truss has been designed for greater of min roof live load of 17.0 psf or 2.00 times flat roof load of 41.0 psf on overhangs non-concurrent with other live loads.
7) This truss has been designed for basic load combinations, which include cases with reductions for multiple concurrent live loads.
8) All plates are MT20 plates unless otherwise indicated.
9) See BEH18 DETAILS for plate placement.
10) Provisions must be made to prevent lateral movement of hinged member(s) during transportation.
11) All additional member connections shall be provided by others for forces as indicated.
12) This truss has been designed for a 10.0 psf bottom chord live load nonconcurrent with any other live loads.
13) * This truss has been designed for a live load of 20.0psf on the bottom chord in all areas where a rectangle 3-6-0 tall by 2-0-0 wide will fit between the bottom chord and any other members.
14) Provide mechanical connection (by others) of truss to bearing plate capable of withstanding 253 lb uplift at joint 2 and 336 lb uplift at joint 8.
15) This truss has been designed in accordance with the 2009 IBC Section 2303.4.6, 2009 IRC Section 802.10.2.
16) The field-installed members are an integral part of the truss design. Retain a design professional to specify final field connections and temporary supports. All field-installed members must be properly fastened prior to applying any loading to the truss. This design anticipates the final set position.
17) Take precaution to keep the chords in plane, any bending or twisting of the hinge plate must be repaired before the building is put into service.
18) Truss has been designed per 2006 IBC Sec. 2303.4.2; 2006 IRC Sec. 802.10.2.

E-signed by Kevin Freeman

COMMONWEALTH OF PENNSYLVANIA
REGISTERED PROFESSIONAL
KEVIN W. FREEMAN
ENGINEER
PE-054541-E
3/11/2014

The professional engineering seal indicates that a licensed professional has reviewed the design under the standards referenced within this document, not necessarily the current state building code. The engineering seal is not an approval to use in a specific state. The final determination on whether a truss design is acceptable under the locally adopted building code rest with the building official or designated appointee.

WARNING - *Verify design parameters and READ NOTES*

Universal Forest Products, Inc. 2801 EAST BELTLINE RD, NE
PHONE (616)-364-6161 FAX (616)-365-0060 GRAND RAPIDS, MI 49525

Truss shall not be cut or modified without approval of the truss design engineer.
This component has only been designed for the loads noted on this drawing. Construction and lifting forces have not been considered. The builder is responsible for lifting methods and system design. Builder responsibilities are defined under TPI1. This design is based only upon parameters shown, and is for an individual building component to be installed and loaded vertically. Applicability of design parameters and proper incorporation of component is responsibility of building designer - not truss designer. Bracing shown is for lateral support of individual web members only. Additional temporary bracing to insure stability during construction is the responsibility of the erector. Additional permanent bracing of the overall structure is the responsibility of the building designer. For general guidance regarding fabrication, quality control, storage, delivery, erection and bracing, consult BCSI 1-06 from the Wood Truss Council of America and Truss Plate Institute Recommendation available from WTCA, 6300 Enterprise LN, Madison, WI 53719. J:\support\MiTekSupp\templates\ufp.tpe© copyright 2014 by: Universal Forest Products, Inc.