GENERAL NOTES:

1. The notes on the drawings are not intended to replace specifications. in addition to general notes. See specifications for requirements
2. Structural drawings shall be used in conjunction with job specifications and architectural, mechanical, electrical, plumbing, and site drawings. Consult, openings, chases, inserts, reglets, sleeves, depressions, and other details not shown on structural drawings.
3. All dimensions and conditions must be verified in the field. Any discrepancies shall be brought to the attention of the engineer before proceeding with the affected part of the work.
4. Do not scale plans.
5. Sections and details shown on any structural drawings shall be considered typical for similar conditions.
6. All propietary products shall be installed in accordance with the manufacturers written instructions.
7. The structure is designed to be self supporting and stable after the erection is complete. It is the contractor's sole responsibility to determine erection procedures and sequencing to ensure the safety of the building and its components during erection. This includes the addition of necessary shoring, sheeting temporary bracing, guys or tiedowns. Such material shall remain the property of the contractor after completion of the project.
8. All applicable federal, state, and municipal regulations shall be followed, including the federal department of labor occupational safety and health act.

DESIGN LOADS:

1. Building code: IRC (2009) International Residential Building Code.
2. Design Live Loads: (Ground Snow load = 60 psf)
   Roof ..... 45 psf + drift as applicable
   Living areas ..... 40 psf
   Exterior deck ..... 40 psf
3. Design wind loads are based on exposure B using 100 mph basic wind speed.
4. Seismic Design Utilizes Analysis Procedure shall be equivalent Lateral Force Procedure per IBC 2009.

FOUNDATION NOTES:

1. Foundations have been designed with a presumptive soil bearing capacity of 2000 psf to be verified by the general contractor in the field.
2. Exterior footings shall be founded on undisturbed native soil or compacted structural fill.
3. Exterior strip and spread footings shall be founded a minimum of 4'–0" below finished site grade.
4. Structural fill shall be used at all locations below footings and adjacent to the foundation piers. Prior to placement of structural fill, remove all topsoil and other unsuitable material. Compacted structural fill shall consist of clean granular material free of organics, loam, trash, snow, ice, frozen soil or any other objectionable material. It shall be well graded within the following limits:

SCREEN OR SIEVE SIZE	PERCENT FINER BY WEIGHT
6 INCH	100
3 INCH	70–100
NO. 4	35–70
NO. 40	5–35
NO. 200	0–5

5. Structural fill (or ⅜" crushed stone) beneath footings shall be placed in layers not exceeding 6 inches in loose measure and compacted by self–propelled compaction equipment at approximate optimum moisture content to a dry density of at least 95% of the maximum in place dry density as determined by the modified proctor test (ASTM D–1557). For structural fill or 100% of the rodded unit weight as determined by ASTM C–29 for ⅜" crushed stone.

CONCRETE NOTES:

1. All concrete work shall conform to ACI 318–Latest Edition.
2. Concrete strength at 28 days shall be 3000 psi.
3. All concrete shall be air entrained 4% to 6% per the specifications.
4. Concrete shall not be placed in water or on frozen ground.
5. Concrete materials:
   A. Portland Cement: ASTM C 150, Type I or Type II unless otherwise acceptable to Architect. Use one brand of cement throughout project, unless otherwise acceptable to Architect.
   B. Normal Weight Aggregates: ASTM C 33. Provide from a single source for exposed concrete. Do not use aggregates containing soluble salts or other substances such as iron sulfides, pyrite, marcasite, or ochre which can cause stains on exposed concrete surfaces.
   C. Light Weight Aggregates: ASTM C 330.
   D. Water: Potable.
   E. Air–Entraining Admixture: ASTM C 260.
   F. High–Range Water–Reducing Admixture (Super Plasticizer): ASTM C 494, Type F or Type G containing not more than 1% chloride ions.
      1. Fiber reinforcement shall be added and distributed prior to incorporation of Super Plasticizer.
   G. Normal range water reducing admixture: ASTM C 494 Type A containing no calcium chloride.
   H. Accelerating Admixture: ASTM C 494 Type C or E.
   I. Calcium Chloride not permited.
6. Reinforcing bars shall conform to ASTM A615 Grade 60 deformed bars, and shall be detailed, fabricated and erected in accordance with ACI 315–Latest edition.
7. Splices of reinforcing bars shall be in accordance with ACI 318. Splices of WWF shall be 6" minimum.
8. Anchor bolts shall conform to ASTM A307 hot dipped galvanized unless noted otherwise on plan.

TIMBER FRAMING:

1. All Timber framing shall be in accordance with the AITC timber construction manual or the national design specification (NDS) – latest edition
2. Individual timber framing members shall be visually graded, minimum grade #2 Spruce–Pine–Fir (SPF), kiln dried to 19% maximum moisture content.
3. Timber shall be southern yellow pine treated with ACQ water borne preservative in accordance with AWPA treatment C1 with 0.40 PCF retainage for items in contact with roofing, masonry or concrete with 0.60 PCF retainage for items in contact with earth.
4. Metal connectors shall be used at all timber to timber connections or as noted on the design drawings. All metal connectors in contact with pressure treated timber shall be hot–dippped galvanized.
5. Provide Simpson H2.5A hurricane anchors where timber framing and/or trusses bear on bearing walls and structural beams.
6. Nails and screws not specified shall conform with IBC 2009. All nails and screws in contact with pressure treated timber shall be stainless steel.
7. Provide ½" thick APA rated exterior wall sheathing fastened w/ 10d nails @ 4" o.c. at panel edges and 6" o.c. intermediate. Lap sheathing 1'–0" minimum over existing structure (Where applicable).

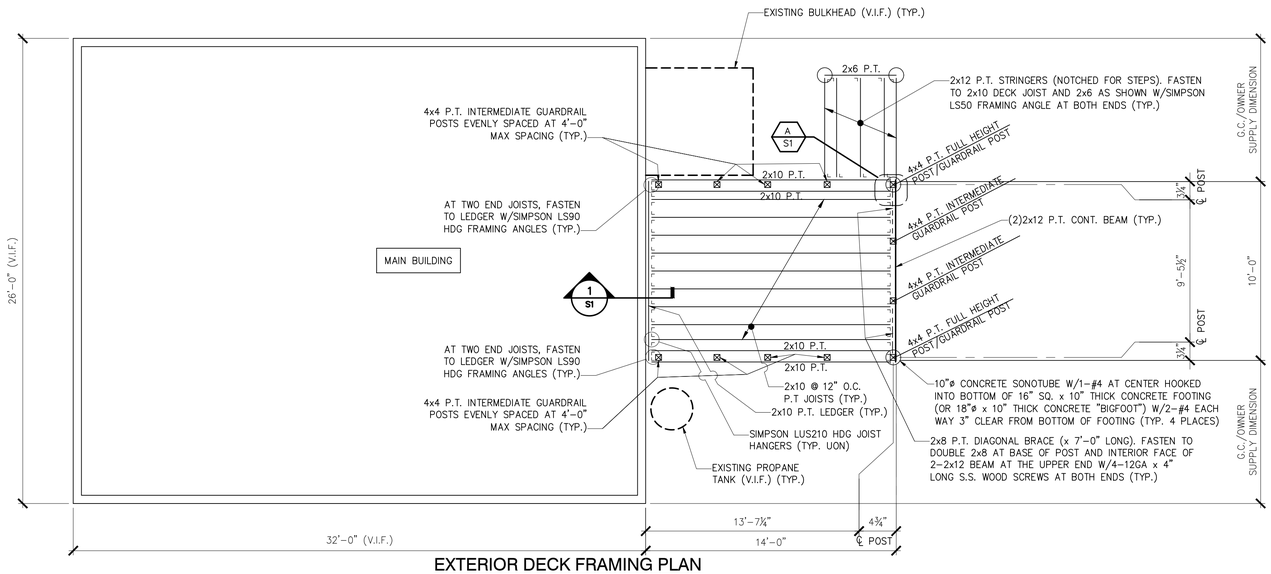

EXTERIOR DECK FRAMING PLAN

1/4" = 1'-0"

NOTES:
1. SEE GENERAL NOTES ON DWG S1.
2. "℄" INDICATES: EXISTING CONDITIONS, OR MEMBERS.
3. "TYP." INDICATES: TYPICAL (ALSO SEE GENERAL NOTE #5).
4. "V.I.F." INDICATES: G.C. SHALL "VERIFY IN FIELD" EXISTING DIMENSIONS, ELEVATIONS, OR CONDITIONS INDICATED AND REPORT ANY DISCREPANCIES TO THE ENGINEER.
5. "U.O.N." INDICATES: UNLESS OTHERWISE NOTED.
6. "S.S." INDICATES: STAINLESS STEEL.

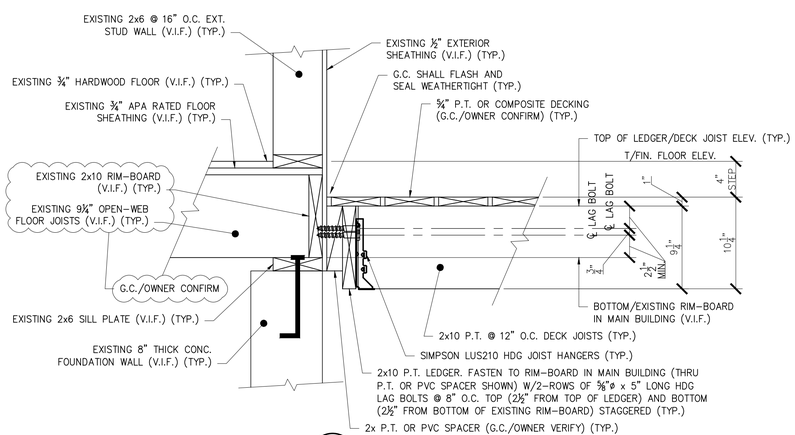

SECTION 1 S1
1 1/2" = 1'-0"

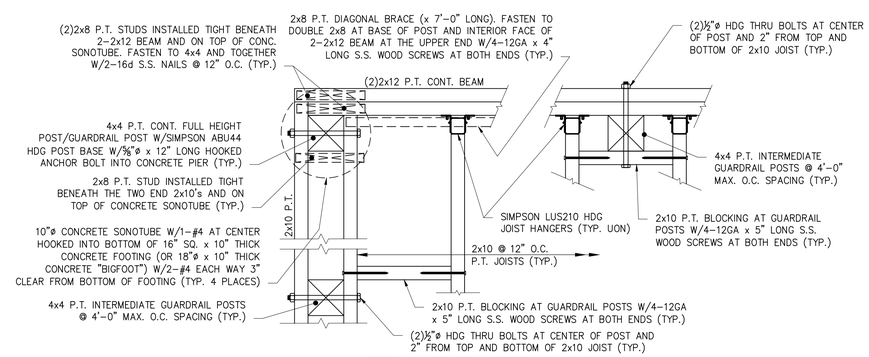

DETAIL A S1
1 1/2" = 1'-0"

NOTE: GUARDRAIL DESIGN BY OTHERS (3'–0" MIN. HEIGHT FROM DECK TO TOP OF GUARDRAIL)

THESE DRAWINGS HAVE BEEN DEVELOPED BY L&L STRUCTURAL ENGINEERING SERVICES, INC. FOR THE TITLED SET ONLY. THE DRAWINGS ARE THE SOLE PROPERTY OF L&L ENGINEERING SERVICES, INC. AND THEY SHALL NOT BE USED, LENT, COPIED OR ALTERED WITHOUT THE WRITTEN CONSENT OF L&L STRUCTURAL ENGINEERING SERVICES, INC.

L & L STRUCTURAL
ENGINEERING SERVICES, INC.
SIX Q STREET
SOUTH PORTLAND, MAINE 04106
PHONE: (207) 767–4830
FAX: (207) 799–5432
EMAIL: JLEASURE@L–L–ENG.COM

STATE OF MAINE
JOSEPH H. LEASURE
No. 6242
LICENSED
PROFESSIONAL ENGINEER

rev.	date	description	appr'd

designed by: JHL
drawn by: RJW
checked by: JHL
scale: AS NOTED
date: 03/15/2016
plot date: 03/15/2016
project # 2015–168

RESIDENTIAL BUILDING LOCATED AT
27 COPLEY WOODS CIRCLE
PORTLAND, MAINE

EXTERIOR DECK ADDITION
GENERAL NOTES, DECK FRAMING PLAN, SECTIONS, AND DTLS

S1