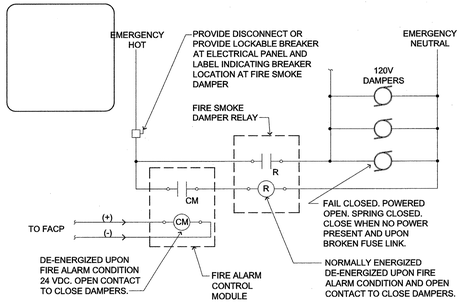

5 FIRE/SMOKE DAMPER CONTROL

SCALE: N.T.S.

T:/16ELECT/700COMM/167000125

NOTES:
1. HVAC CONTRACTOR TO SUPPLY AND WIRE ALL COMPONENTS PER DIAGRAM.
2. FIRE PANEL CONTACTS AT "+" AND "-" ONLY.
3. FIRE PANEL CONTRACTOR TO SUPPLY WIRE FROM PANEL AND CONNECT TO CONTACTS ON DC RELAY TERMINALS MARKED "+" AND "-".

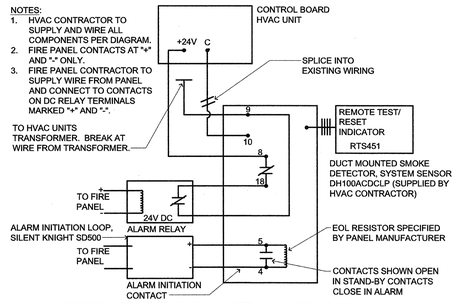

4 FIRE ALARM/AC UNIT SHUTDOWN

SCALE: N.T.S.

T:/16ELECT/700COMM/167000128

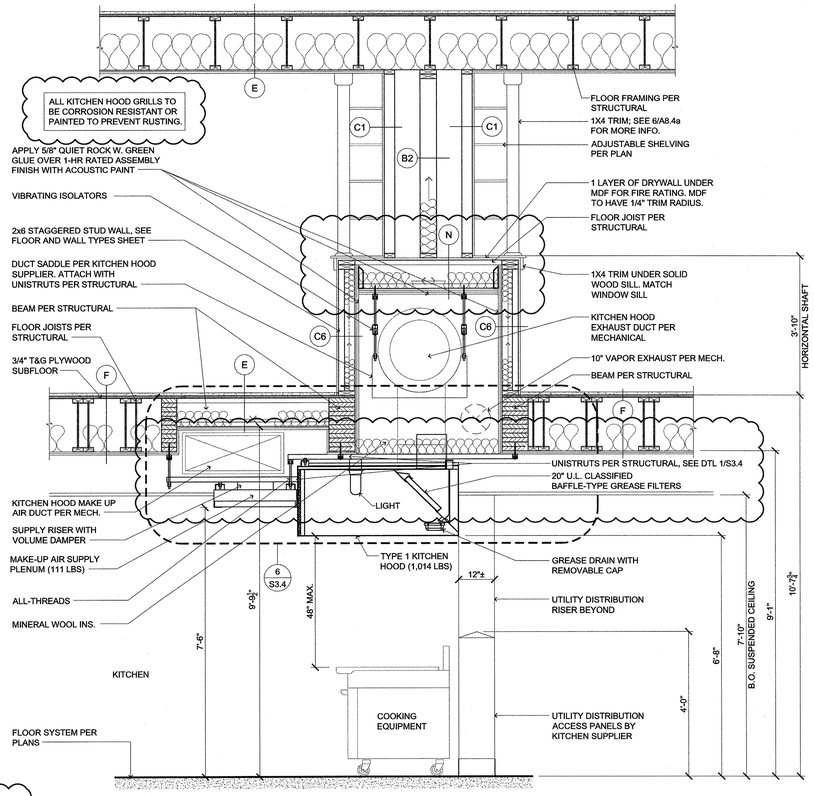

3 DUCT FRAMING (KITCHEN EXHAUST DUCT) MULTI-STORY

SCALE: 1/2" = 1'-0"

T:/06WD&PLS/10FRAMG/06110638

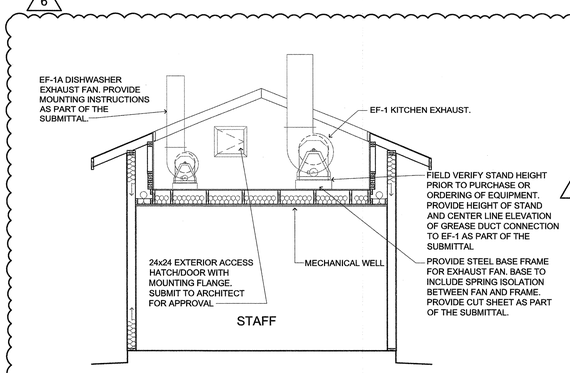

2 PARTIAL SECTION

SCALE: 1/4" = 1'-0"

T:/15MECH/500HVAC/15500083

NOTE: PENETRATIONS OF AREA SEPERATION WALLS SHALL BE PROTECTED WITH THROUGH-PENETRATION FIRE STOPS AND MEMBRANE PENETRATION FIRE STOPS

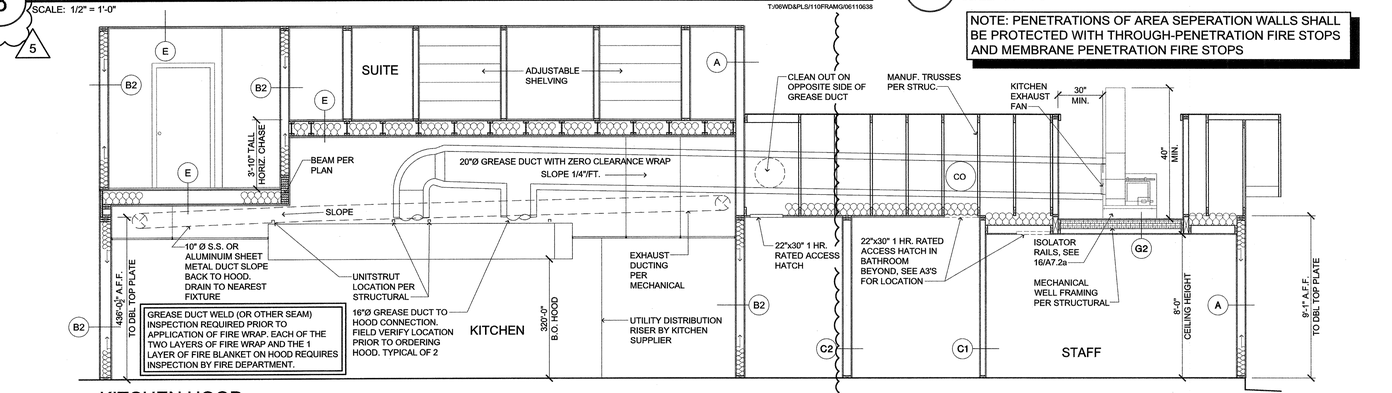

1 KITCHEN HOOD (SECTION)

SCALE: 1/4" = 1'-0"

T:/15MECH/500HVAC/15500098

MECHANICAL LEGEND

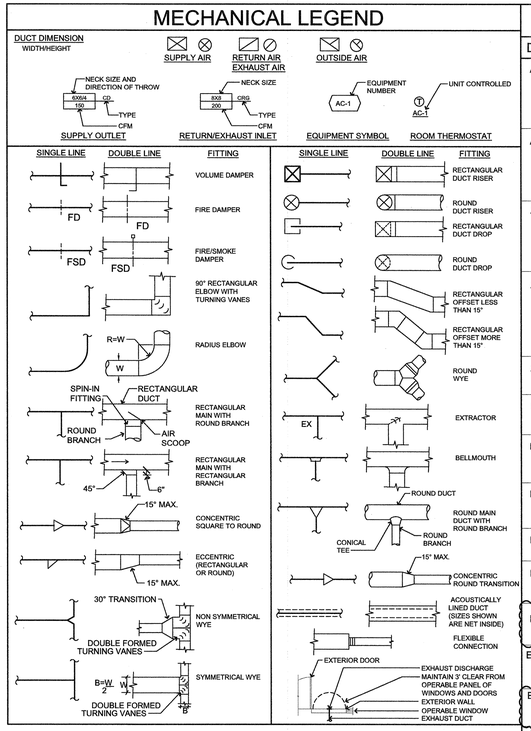

EQUIPMENT SCHEDULE

DESIG.	DESCRIPTION	ELECTRICAL
AC-1	PACKAGED ROOFTOP A/C UNIT WITH GAS HEAT: SUPPLY: 4,100 CFM AT 1.5 IN. E.S.P. 1,250 CFM MIN. OSA. MIN. COOLING: 117.22 MBH TOTAL, 69.22 MBH SEN. EER RATING = 11.10. MIN. HEATING: 180/224 MBH INPUT; 147/184 MBH OUTPUT. PROVIDE ECONOMIZER AND HAIL GUARD. PROVIDE CO2 MONITORING AND CONTROL SYSTEM AND HIGH STATIC MOTOR. CARRIER 48TC- 10 TON (DUAL POINT CONNECTION 208V/3ø), APPROXIMATE OPERATING WEIGHT: 1,400 LB.	AC CONNECTION MCA - 43.125 MOCP - 60/3 FAN CONNECTION MCA - 14.1 MOCP - 25/3
AC-2	PACKAGED ROOFTOP A/C UNIT WITH GAS HEAT: SUPPLY: 3,300 CFM AT 1.5 IN. E.S.P. 1,000 CFM MIN. OSA. MIN. COOLING: 117.22 MBH TOTAL, 69.22 MBH SEN. EER RATING = 11.10. MIN. HEATING: 180/224 MBH INPUT; 147/184 MBH OUTPUT; WITH ROOF CURB AND SPRING ISOLATION. PROVIDE ECONOMIZER AND HAIL GUARD. PROVIDE CO2 MONITORING AND CONTROL SYSTEM AND HIGH STATIC MOTOR. CARRIER 48TC- 10 TON (DUAL POINT CONNECTION 208V/3ø), APPROXIMATE OPERATING WEIGHT: 1,400 LB.	AC CONNECTION MCA - 43.125 MOCP - 60/3 FAN CONNECTION MCA - 14.1 MOCP - 25/3
AC-3	PACKAGED ROOFTOP A/C UNIT WITH GAS HEAT: SUPPLY: 3,850 CFM AT 1.5 IN. E.S.P. 1,150 CFM MIN. OSA. MIN. COOLING: 117.22 MBH TOTAL, 69.22 MBH SEN. EER RATING = 11.10. MIN. HEATING: 180/224 MBH INPUT; 147/184 MBH OUTPUT; PROVIDE ECONOMIZER AND HAIL GUARD. PROVIDE CO2 MONITORING AND CONTROL SYSTEM AND HIGH STATIC MOTOR. CARRIER 48TC- 10 TON (DUAL POINT CONNECTION 208V/3ø), APPROXIMATE OPERATING WEIGHT: 1,400 LB.	AC CONNECTION MCA - 43.125 MOCP - 60/3 FAN CONNECTION MCA - 14.1 MOCP - 25/3
AC-4	PACKAGED ROOFTOP A/C UNIT WITH GAS HEAT: SUPPLY: 3,500 CFM AT 1.5 IN. E.S.P. 300 CFM MIN. OSA. MIN. COOLING: 92 MBH TOTAL, 62.1 MBH SEN. 68.1F EWB, 95F AMBIENT. EER RATING = 11.10. MIN. HEATING: 180/224 MBH INPUT; 147/184 MBH OUTPUT; WITH ROOF CURB AND SPRING ISOLATION. PROVIDE ECONOMIZER AND HAIL GUARD. PROVIDE CO2 MONITORING AND CONTROL SYSTEM AND HIGH STATIC MOTOR. CARRIER 48TC- 8.5 TON (DUAL POINT CONNECTION 208V/3ø), APPROXIMATE OPERATING WEIGHT: 1,400 LB.	AC CONNECTION MCA - 48 MOCP - 60/3 FAN CONNECTION MCA - 14.1 MOCP - 25/3
AD-1	42" SINGLE SPEED AMBIENT AIR CURTAIN FOR KITCHEN SERVICE DOOR. 1,212 CFM. WITH NEMA 1 LINE VOLTAGE ROLLER TYPE DOOR SWITCH AND REMOTE HAND/OFF/AUTO SELECTOR SWITCH. BERNER AL08-1042A.	120V/1Ø
MAU-1	EQUIPMENT LISTED ON "H" SHEET. OWNER PROVIDED CONTRACTOR INSTALLED. BALANCE MUA-1 AND ASSOCIATED GREASE EXHAUST FAN. VERIFY WITH MANUFACTURER DRAWINGS ("H") FOR ADDITIONAL REQUIREMENTS AND ITEMS TO BE PROVIDED FOR COMPLETE INSTALL.	SEE H-2
PTAC-1	PACKAGED THROUGH-WALL HEAT PUMP: 250 CFM, 70 CFM OUTSIDE AIR, FIXED. MIN. COOLING: 9.1 MBH TOTAL AT ARI CONDITIONS. INTEGRATED HEATING: 8.1 MBH AT 47F OUTSIDE; 2,820 W AUXILIARY HEATING. GE MODEL AZ61H09DA WITH LINE CORD KIT RAK-SERIES TO MATCH.	208V/1Ø 20 AMP.
PTAC-2	PACKAGED THROUGH-WALL HEAT PUMP: 250 CFM, 70 CFM OUTSIDE AIR, FIXED. MIN. COOLING: 11.7 MBH TOTAL AT ARI CONDITIONS. INTEGRATED HEATING: 10.7 MBH AT 47F OUTSIDE; 2,820 W AUXILIARY HEATING. GE MODEL AZ61H12DA WITH LINE CORD KIT RAK-SERIES TO MATCH.	208V/1Ø 20AMP.
PTAC-3	PACKAGED THROUGH-WALL A/C UNIT/HEATER. 250 CFM, MIN. COOLING: 9.7 MBH TOTAL @ ARI CONDITIONS. HEATING: 3010 WATTS ELECTRIC HEATER, GE AJEQ10 DCD.	208 V/1Ø 20 AMP
PTAC-4	PACKAGED THROUGH-WALL HEAT PUMP: 194 CFM, 50 CFM OUTSIDE AIR, FIXED. MIN. COOLING: 6.9 MBH TOTAL AT ARI CONDITIONS. INTEGRATED HEATING: 6.1 MBH AT 47F OUTSIDE; 2,820 W AUXILIARY HEATING. GE MODEL AZ61H07DA WITH LINE CORD KIT RAK-SERIES TO MATCH.	208V/1Ø 20 AMP.
HP-1 6	INDOOR UNIT: SPLIT VERTICAL HEAT PUMP. 1200 CFM @ 0.5" SP, 240 MIN CFM OUTSIDE AIR WITH MANUAL CONTROL. MINIMUM COOLING 36,000 BTUH. INTEGRATED HEATING 36,000 BTUH, 10 KW AUXILIARY HEATING. CARRIER FX4D. OUTDOOR UNIT: CARRIER 25HCE436, EER = 14; HSPF = 8.2.	208 V/1Ø MCA - 50.4 MOCP - 60 MCA-20, MOCP-30
EF-1	GREENHECK UTILITY SET FAN: USF-316-10-BI-30 WITH MOUNTING RAIL AND SPRING BASE. EXHAUST FAN TO BE INTERLOCKED WITH VARIABLE HOOD - PROVIDE MOTOR AND OTHER ACCESSORIES FOR COMPLETE INSTALL. 3,840 CFM AT 1.5" ESP WITH INLET SONES OF 24 OR LESS.	208/3PHASE 3HP MOTOR
EF-1A 6	GREENHECK UTILITY SET FAN: USF-212-10-BI-4 WITH MOUNTING RAIL AND SPRING BASE. EXHAUST FAN TO BE INTERLOCKED WITH DISH WASHER HOOD - PROVIDE MOTOR AND OTHER ACCESSORIES FOR COMPLETE INSTALL. 600 CFM AT 0.5" ESP WITH INLET SONES OF 24 OR LESS.	120V/1P 1/4HP
EF-2	MECHANICAL ROOMS: CEILING MOUNTED EXHAUST FAN : 100 CFM @ 0.1" TSP, WITH GRILL BACK DRAFT DAMPER. REVERSOMATIC EB-100 + FF - FIREFIGHTER FIRE DAMPER. CONTROL: THERMOSTAT SET TO 75-DEGREE F.	120V/1Ø 0.6 AMPS
EF-3	BROAN MODEL 512 RM. TO RM. TRANSFER FAN WITH VARIABLE SPEED CONTROL MODEL 57W. BOTTOM OF FAN 6" ABOVE F.F. AND AS CLOSE TO POSSIBLE TO BEDROOM DOOR. CONTROL: CONTINUOUS	115V/1Ø 0.7 AMPS
EF-4	PUBLIC SINGLE TOILET: CEILING MOUNTED EXHAUST FAN: 75 CFM AT 0.10 IN. T.S.P. WITH GRILLE AND BACK DRAFT DAMPER. REVERSOMATIC FAN EB80 + REVERSOMATIC FF-FIREFIGHTER FIRE DAMPER. CONTROL: SWITCH	120V/1Ø 0.35 AMPS
EF-5	SUITE TOILETS AND JANITOR ROOMS: CEILING MOUNTED EXHAUST FAN: 50 CFM AT 0.3 IN. T.S.P. WITH GRILLE AND BACK DRAFT DAMPER. REVERSOMATIC FAN EB80 + FF - FIREFIGHTER FIRE DAMPER. CONTROL: LIGHT SWITCH	120V/1Ø 0.35 AMPS
EF-6	IN-LINE EXHAUST FAN : 1500 CFM @ 2.0" TSP. GREENHECK BSQ - 160HP OR APPROVED.	120V/1Ø 1HP
EF-6A	IN-LINE EXHAUST FAN : 950 CFM @ 2.0" TSP. GREENHECK BSQ - 140HP OR APPROVED.	120V/1Ø 3/4HP
EF-7	BEAUTY ROOM: CEILING MOUNTED EXHAUST FAN: 350 CFM @ 0.1" S.P., WITH GRILLE AND BACK DRAFT DAMPER. REVERSOMATIC QCF400 + REVERSOMATIC FF - FIRE DAMPER. CONTROL: INTERLOCK WITH PTAC BY RELAY	120V/1Ø 1.6 AMPS
EF-8	LAUNDRY, GYM AND FIRST FLOOR CORE TOILETS: CEILING MOUNTED EXHAUST FAN : 150 CFM @ 0.1" TSP, WITH GRILL BACK DRAFT DAMPER. REVERSOMATIC CF225 + FF - FIREFIGHTER FIRE DAMPER. CONTROL: LIGHT SWITCH	120V/1Ø 1.4 AMPS
EF-8a	GYM/EXERCISE ROOM: CEILING MOUNTED EXHAUST FAN : 250 CFM @ 0.25" ESP, WITH GRILL BACK DRAFT DAMPER. GREENHECK SP-A290 WITH CEILING RADIATION DAMPER. CONTROL: INTERLOCK WITH NEAREST HP-1	120V/1Ø 81 WATTS
EF-9	ATTIC VENTILATOR-AIR VENT MODEL POWER COOL PLUS12, RATED 1170 CFM UNIT ROOF MOUNTED W/ TEMP. AND HUMIDITY CONTROL. (SEE DETAIL #8/E2.2 FOR WIRING). WALL-MOUNTED-WHISPER COOL PLUS APGH-PREMIUM PLUS GABLE-MOUNT W/ AUTOMATIC SHUTTER.	120V/1Ø 1/12 HP
EF-10	IN-LINE EXHAUST FAN : 900 CFM @ 1.5" TSP. GREENHECK BSQ - 130HP OR APPROVED.	120V/1Ø 3/4HP
SF-1	ROOM TO ROOM FAN, BROAN 512, 90 CFM	120V, 0.5 AMP
DS-1A DS-1B	OUTDOOR CONDENSING UNIT: MATCH WITH DS-1B INDOOR UNIT. DAIKIN RXN12KEVJU. INDOOR SPLIT SYSTEM: 12 MBH COOLING, 13.5 MBH HEATING. WALL MOUNTED WIRELESS REMOTE: FTN12KEVJU. CONNECTION TO DS-1A BY EQUIPMENT MANUFACTURER.	208V/1Ø 15 MOCP SINGLE POINT CONNECTION 6.1 FLA
DS-2 DS-2A DS-2B DS-2C DS-2D	OUTDOOR CONDENSING UNIT: DAIKIN VRV-III-S RXYMQ48PAVJU. 48 MBH COOLING / 54 MBH HEATING. INDOOR UNIT: DAIKIN FXMQ15PAVJU: 15 MBH COOLING / 17 MBH HEATING. PROVIDE BRC1E72 THERMOSTAT. INDOOR UNIT: DAIKIN FXMQ15PAVJU: 15 MBH COOLING / 17 MBH HEATING. PROVIDE BRC1E72 THERMOSTAT. INDOOR UNIT: DAIKIN FXMQ15PAVJU: 15 MBH COOLING / 17 MBH HEATING. PROVIDE BRC1E72 THERMOSTAT. INDOOR UNIT: DAIKIN FXMQ15PAVJU: 15 MBH COOLING / 17 MBH HEATING. PROVIDE BRC1E72 THERMOSTAT. 3rd FLOOR INDOOR UNIT TO CONTROL OUTDOOR HEAT PUMP COOLING / HEATING MODE. EACH FAN THERMOSTAT TO BE PROGRAMMED FOR 68°F HEATING / 73°F COOLING. FAN MOTOR SET TO "ON" AND HEATING/COOLING SET TO "AUTO". CONDENSATE TO BE DAYLIGHT AS INDICATED ON DRAWINGS.	208V/1Ø 30 MOCP 208V/1Ø 15 MOCP 208V/1Ø 15 MOCP 208V/1Ø 15 MOCP 208V/1Ø 15 MOCP
DS-3 DS-3A DS-3B DS-3C DS-3D	OUTDOOR CONDENSING UNIT: DAIKIN VRV-III-S RXYMQ48PAVJU. 48 MBH COOLING / 54 MBH HEATING. INDOOR UNIT: DAIKIN FXMQ15PAVJU: 15 MBH COOLING / 17 MBH HEATING. PROVIDE BRC1E72 THERMOSTAT. INDOOR UNIT: DAIKIN FXMQ15PAVJU: 15 MBH COOLING / 17 MBH HEATING. PROVIDE BRC1E72 THERMOSTAT. INDOOR UNIT: DAIKIN FXMQ15PAVJU: 15 MBH COOLING / 17 MBH HEATING. PROVIDE BRC1E72 THERMOSTAT. INDOOR UNIT: DAIKIN FXMQ15PAVJU: 15 MBH COOLING / 17 MBH HEATING. PROVIDE BRC1E72 THERMOSTAT. 3rd FLOOR INDOOR UNIT TO CONTROL OUTDOOR HEAT PUMP COOLING / HEATING MODE. EACH FAN THERMOSTAT TO BE PROGRAMMED FOR 68°F HEATING / 73°F COOLING. FAN MOTOR SET TO "ON" AND HEATING/COOLING SET TO "AUTO". CONDENSATE TO BE DAYLIGHT AS INDICATED ON DRAWINGS.	208V/1Ø 30 MOCP 208V/1Ø 15 MOCP 208V/1Ø 15 MOCP 208V/1Ø 15 MOCP 208V/1Ø 15 MOCP
FCU-1	INDOOR FAN COIL UNIT: FIRST COMPANY 60PHYX 1800 CFM AT 0.4" ESP. PROVIDE DRAIN PAN.CONDENSATE ROUTED TO FLOOR SINK AT ICE MAKER.	208V/1Ø 15 MOCP
EDH-1	PROVIDE 5KW UL LISTED OR CSA LISTED ELECTRIC DUCT HEATER. CONTROLS: INTERLOCKED WITH FCU-1 THERMOSTAT FOR AUXILIARY HEAT: INDEECO OPEN COIL DUCT HEATER WITH 0.025" ESP AT 720 FPM AIR VELOCITY.	208V/3Ø 20 MOCP
FCU-2	INDOOR FAN COIL UNIT: FIRST COMPANY 60PHYX 1800 CFM AT 0.4" ESP. PROVIDE DRAIN PAN.CONDENSATE ROUTED TO JANITOR SINK.	208V/1Ø 15 MOCP
CU-1	OUTDOOR CONDENSING UNIT: MATCH WITH F-1 SYSTEM. CARRIER 38HDR. COOLING CAPACITY: 36,000 BTU WITH 13 SEER RATING.	208V/3Ø 13.0 MCA 20 MOCP
CU-2	OUTDOOR CONDENSING UNIT: MATCH WITH FCU-1 SYSTEM. CARRIER 38HDR. COOLING CAPACITY: 60,000 BTU EACH WITH 13 SEER RATING.	208V/3Ø 17.9 MCA 25 MOCP
CU-3	OUTDOOR CONDENSING UNIT: MATCH WITH FCU-2 SYSTEM. CARRIER 38HDR. COOLING CAPACITY: 60,000 BTU EACH WITH 13 SEER RATING.	208V/3Ø 17.9 MCA 25 MOCP
F-1	GAS FIRED FURNACE: 1,200 CFM @ 0.8" E.S.P. 265 CFM OSA. PROVIDE 2-POSITION OSA DAMPER TO OPEN WHEN FURNACE IS BLOWER MOTOR IS OPERATING. MINIMUM COOLING 36 MBH, 40.8 MBH SENSIBLE. MINIMUM HEATING OUTPUT 75 MBH. 92% AFUE MIN. CARRIER 59SP2A80-16	115V/1Ø 9.9 MCA 15 MOCP
CD-3	6X6 CEILING MOUNTED CONSTANT AIR REGULATOR WITH FACTORY RADIANT DAMPER. SEE DRAWINGS FOR 4"Ø AT 50 CFM AND 3"Ø AT 25 CFM.	

DESIGN TEMPERATURE: OUTSIDE DESIGN TEMPERATURE 85°F: ENT DB/WB = 84.9°F/71.3°F - LVG DB/WB = 54.9°F/53.8°F.

ALL OUTDOOR EQUIPMENT SHALL BE PROVIDED WITH SEA COAST PROTECTION OPTION: THIS INCLUDES BUT NOT LIMITED TO ALL EXPOSED AC UNITS, EXHAUST FANS, CONDENSERS, AND PTAC (SEACOAST TRIPLE PROTECTION).

lenity architecture
3150 Kettle Court SE, Salem, Oregon 97301
P 503 399 1090 F 503 399 0565 W lenityarchitecture.com

COLSON AND COLSON GENERAL CONTRACTOR, INC.
2260 McGILCHRIST STREET SE, SUITE 200
SALEM, OREGON, 97302
PHONE (503) 586-7401

PORTLAND RETIREMENT RESIDENCE
802 OCEAN AVE. PORTLAND, MAINE 04103

HVAC DETAILS AND SCHEDULES

©2015 Lenity Architecture

DATE
8/28/2015

REVISED DATE
1 9/22/2015
2 2/2/2016
3 7/18/2016
4 3/13/2017

SHEET
M4.2

save:4/18/2017 2:06 PM jsecord plot:4/18/2017 3:47 PM jsecord file:p:\transform\mine-portland\mechfcn\4.2 hvac details & schedule.dwg M4.2