SITE DETAILS

12 GATE SPECIFICATIONS (AT ENCLOSURE)
SCALE: 1/2" = 1'-0"   T:/02SITEWK/877TRASH/02877020

14 FT. TRASH ENCLOSURE GATE
(2) REQUIRED: (1) AS SHOWN (1) OPPOSITE HAND

MARK	QTY	MATERIAL	LENGTH	NOTE
T-1	2	2" x 14 GA SQ. TUBE	5'-5"	
T-2	2	2" x 14 GA SQ. TUBE	5'-0"	
T-3	4	1-1/4" x 14 GA SQ. TUBE	5'-5"	
T-4B	4	2" x 14 GA SQ. TUBE	6'-3-3/4"	COPE TO FIT PIPE (P-1)
T-5B	4	1-1/4" x 14 GA SQ. TUBE	2'-9-3/8"	
P-1	2	3" SCHED 40 PIPE	5'-8-1/4"	WELD 3/16" SHIMS TO PIPE
P-2	2	4" SCHED 40 PIPE	5'-6"	
P-3	2	3/4" BLACK PIPE	2'-0"	

QUANTITIES SHOWN ARE FOR BOTH GATES

14 FT. TRASH ENCLOSURE GATE - CONT.

MARK	QTY	MATERIAL	LENGTH	NOTE
PL-1	2	5/8" x 10" PLATE		(4) 1" DIA. HOLES
PL-2	2	1/4" x 3-1/2" FLAT		3-1/2" DIA.
R-1	2	5/8" HRR	3'-3"	BEND 90 DEGREES
R-2	24	3/16" ROUND	0'-4"	TACK WELD TO P-1
CP-1	2	1/4" x 4-1/4" DIA. FLAT	4-1/4" DIA.	
CP-2	2	1/4" x 3-1/4" DIA. FLAT	3-1/4" DIA.	

QUANTITIES SHOWN ARE FOR BOTH GATES

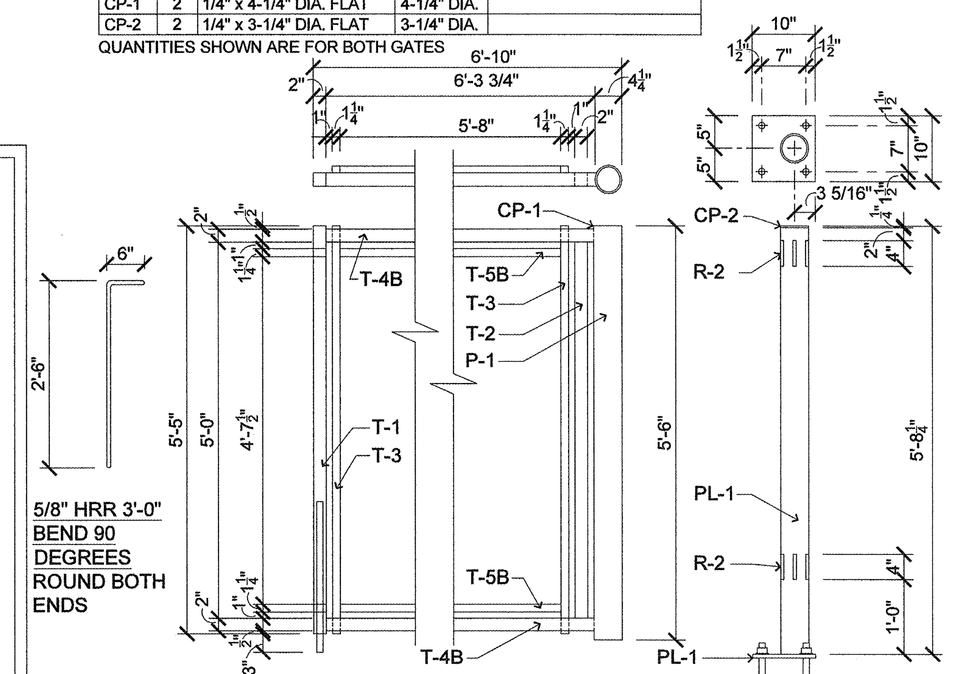

6 FT. TRASH ENCLOSURE GATE
(2) REQUIRED: (1) AS SHOWN (1) OPPOSITE HAND

MARK	QTY	MATERIAL	LENGTH	NOTE
T-1	2	2" x 14 GA SQ. TUBE	5'-5"	
T-2	2	2" x 14 GA SQ. TUBE	5'-0"	
T-3	4	1-1/4" x 14 GA SQ. TUBE	5'-5"	
T-4	4	2" x 14 GA SQ. TUBE	2'-3-3/4"	COPE TO FIT PIPE (P-1)
T-5	4	1-1/4" x 14 GA SQ. TUBE	1'-8"	
P-1	2	3" SCHED 40 PIPE	5'-8-1/4"	
P-2	2	4" SCHED 40 PIPE	5'-6"	WELD 3/16" SHIMS TO PIPE
P-3	2	3/4" BLACK PIPE	2'-0"	
PL-1	2	5/8" x 10" PLATE		(4) 1" DIA. HOLES
PL-2	2	1/4" x 3-1/2" FLAT		3-1/2" DIA.
R-1	2	5/8" HRR	3'-3"	BEND 90 DEGREES
R-2	24	3/16" ROUND	0'-4"	TACK WELD TO P-1
CP-1	2	1/4" x 4-1/4" DIA. FLAT	4-1/4" DIA.	
CP-2	2	1/4" x 3-1/4" DIA. FLAT	3-1/4" DIA.	

QUANTITIES SHOWN ARE FOR BOTH GATES

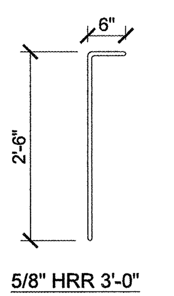

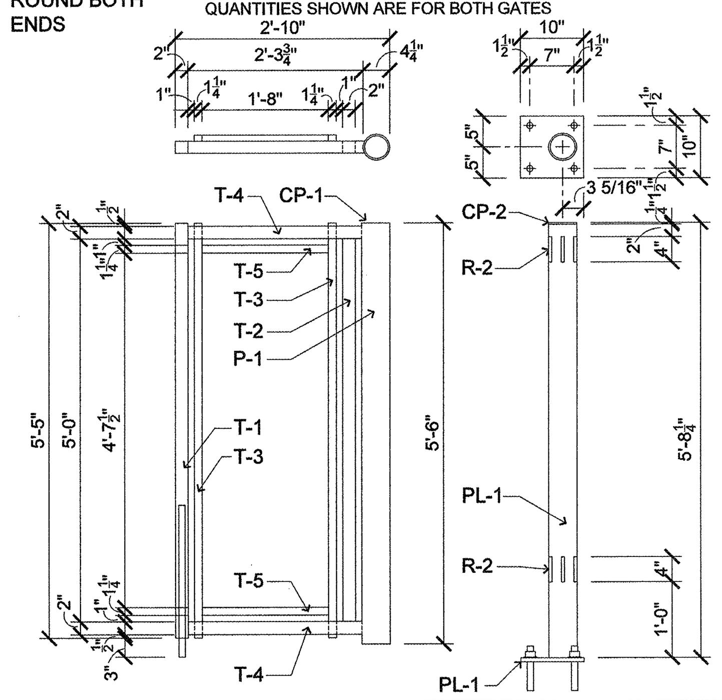

4 FT. TRASH ENCLOSURE GATE

MARK	QTY	MATERIAL	LENGTH	NOTE
T-1	1	2" x 14 GA SQ. TUBE	5'-5"	
T-2	1	2" x 14 GA SQ. TUBE	5'-0"	
T-3	2	1-1/4" x 14 GA SQ. TUBE	5'-5"	
T-4A	2	2" x 14 GA SQ. TUBE	3'-3-3/4"	COPE TO FIT PIPE (P-1)
T-5A	2	1-1/4" x 14 GA SQ. TUBE	2'-8"	
P-1	1	3" SCHED 40 PIPE	5'-8-1/4"	
P-2	1	4" SCHED 40 PIPE	5'-6"	WELD 3/16" SHIMS TO PIPE
P-3	1	3/4" BLACK PIPE	2'-0"	
PL-1	1	5/8" x 10" PLATE		(4) 1" DIA. HOLES
PL-2	1	1/4" x 3-1/2" FLAT		3-1/2" DIA.
R-1	1	5/8" HRR	3'-3"	BEND 90 DEGREES
R-2	12	3/16" ROUND	0'-4"	TACK WELD TO P-1
CP-1	1	1/4" x 4-1/4" DIA. FLAT	4-1/4" DIA.	
CP-2	1	1/4" x 3-1/4" DIA. FLAT	3-1/4" DIA.	

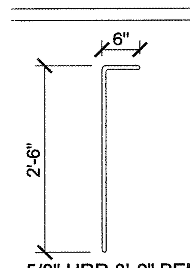

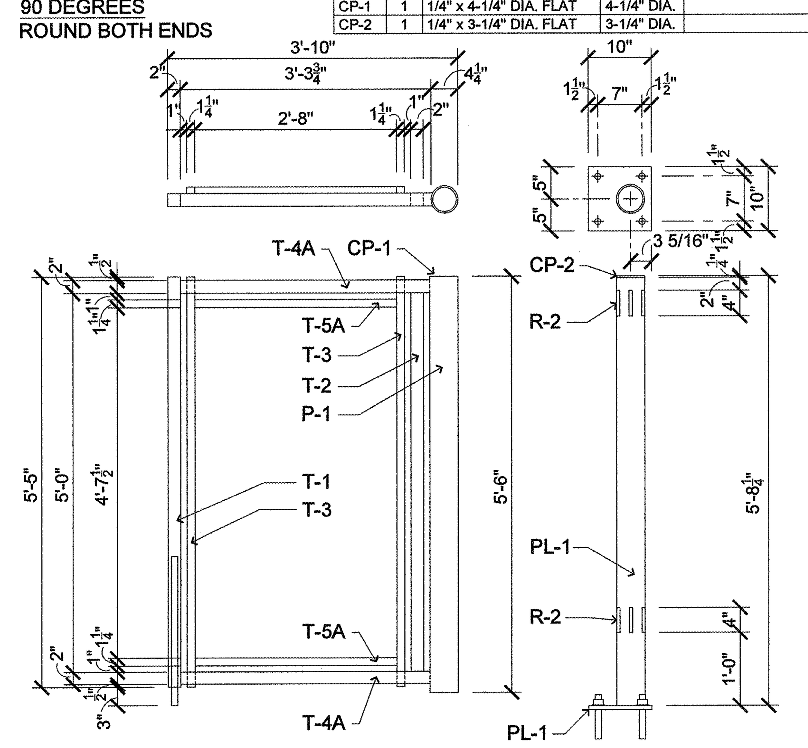

11 ENCLOSURE (TRASH & RECYCLING)
SCALE: 3/16" = 1'-0"   T:/02SITEWK/877TRASH/02877021

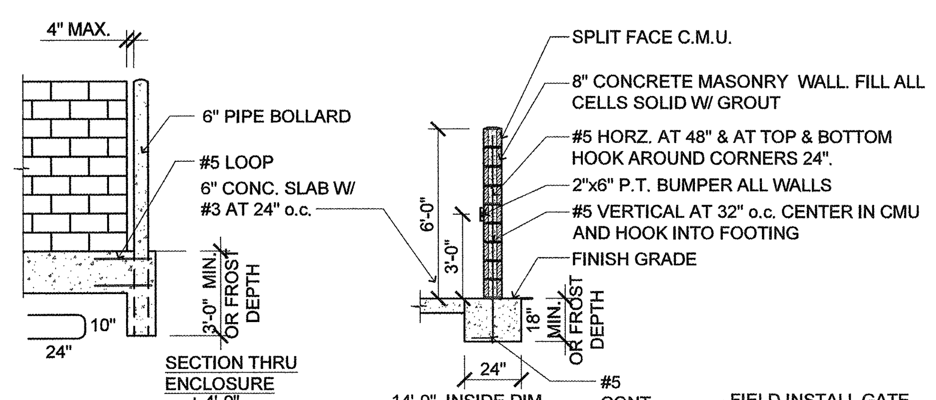

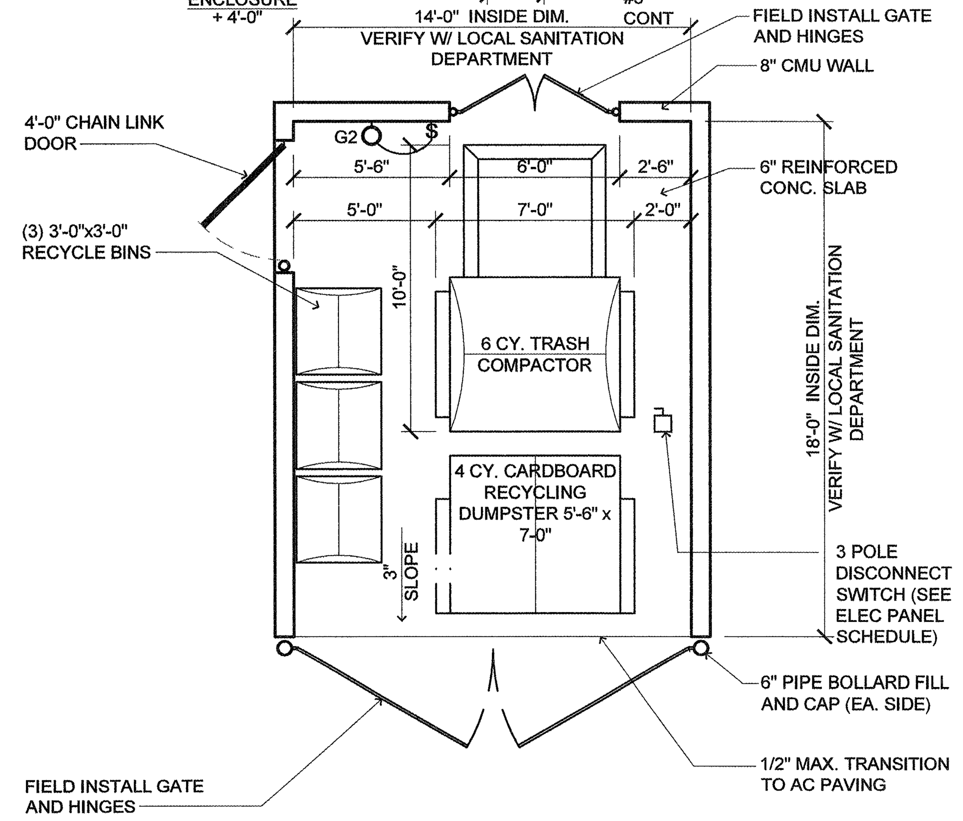

13 BOLLARD (LOCKABLE / REMOVABLE)
SCALE: N.T.S   T:/02SITEWK/830FENCE/02830022

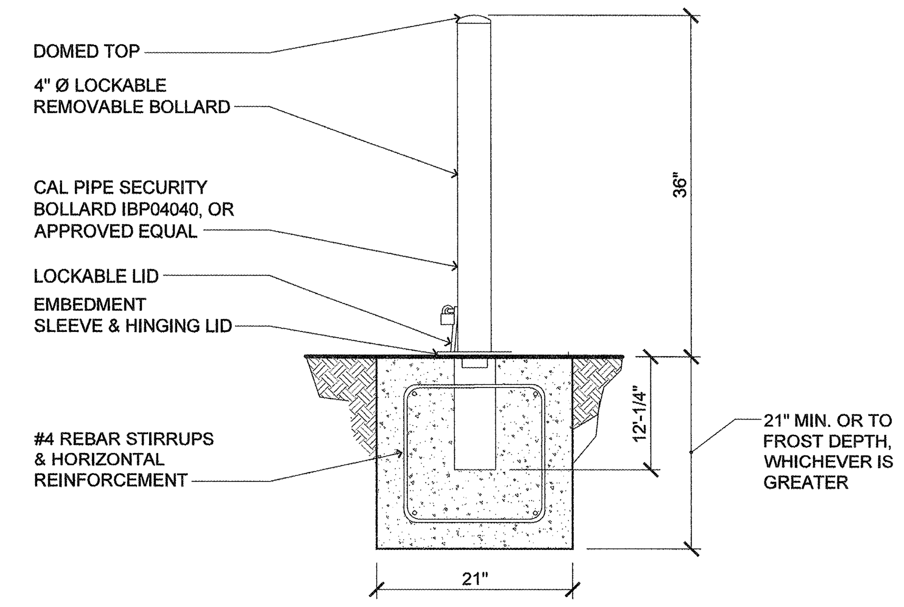

NOTES:
1. INSTALLATION TO BE COMPLETED IN ACCORDANCE WITH MANUFACTURER'S SPECIFICATIONS.

7 BENCH WALL
SCALE: 1/2" = 1'-0"   T:/02SITEWK/870FRNSH/02870014

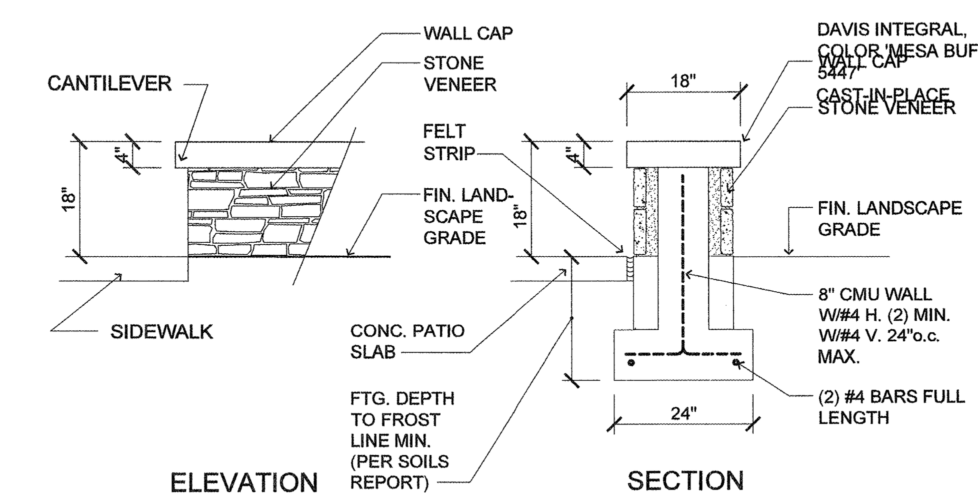

4 RAISED PLANTER (PRESSURE TREATED)
SCALE: 1/2" = 1'-0"   T:/02SITEWK/870FRNSH/02870003

NOTE:RAISED PLANTER WILL BE 2 DIFFERENT HEIGHTS.
23" HIGH WILL BE DESIGNATED AS 'A' AND 34" HIGH 'B' ON THE SITE PLAN

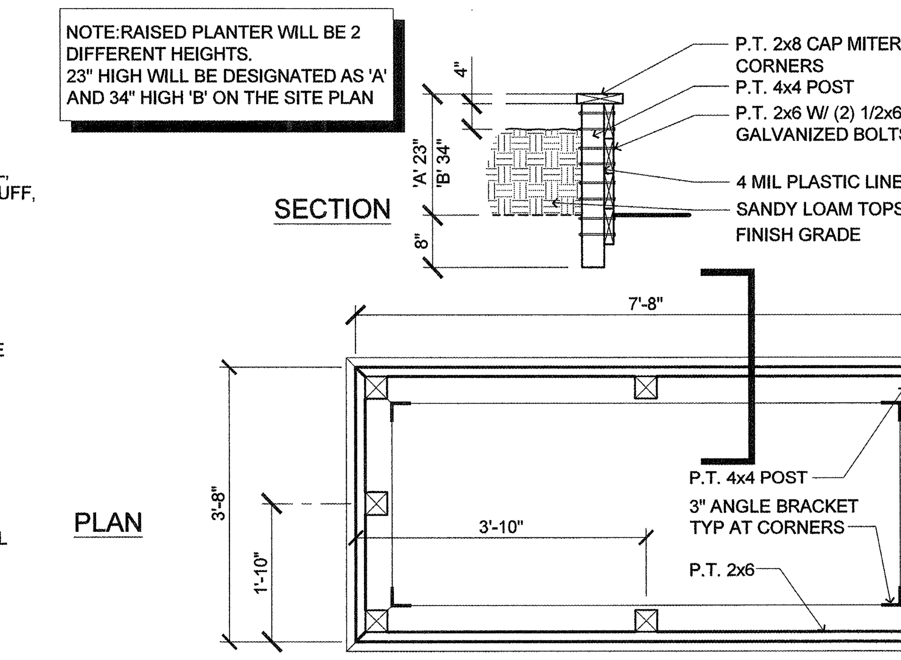

9 FIRE PIT CONTROL BOX
SCALE: 1" = 1'-0"   T:/02SITEWK/870FRNSH/02870044

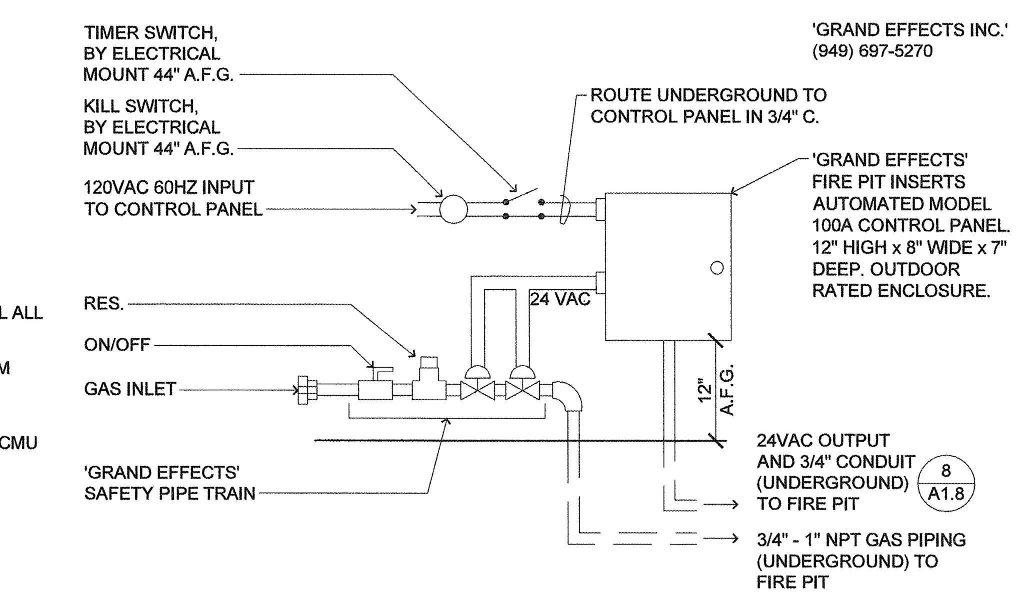

3 CEDAR BENCH DETAIL
SCALE: 1-1/2" = 1'-0"   T:/02SITEWK/870FRNSH/02870001

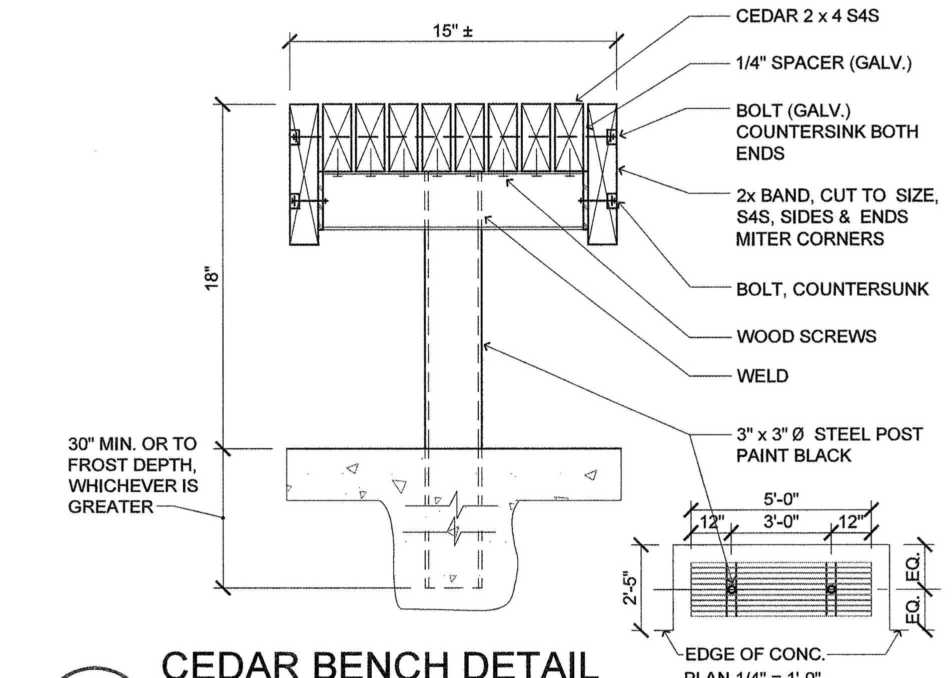

6 GENERATOR SLAB (LAYOUT)
SCALE: 1/4" = 1'-0"   T:/02SITEWK/870FRNSH/02870043

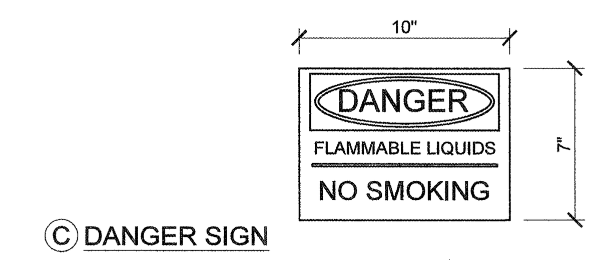

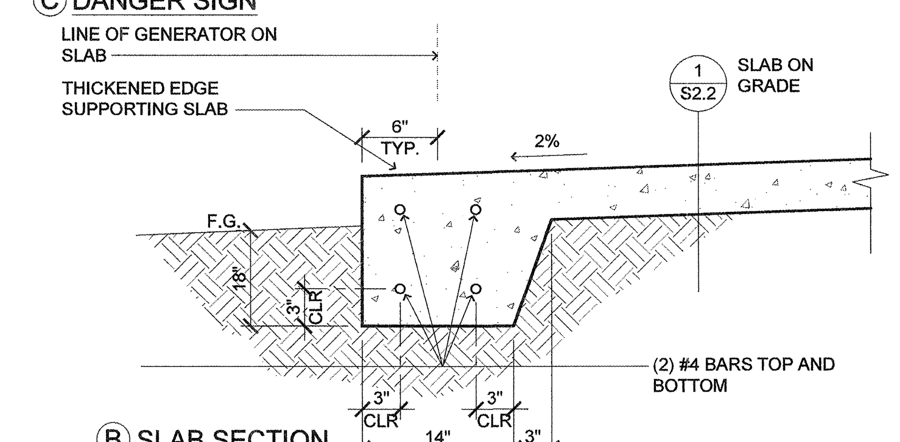

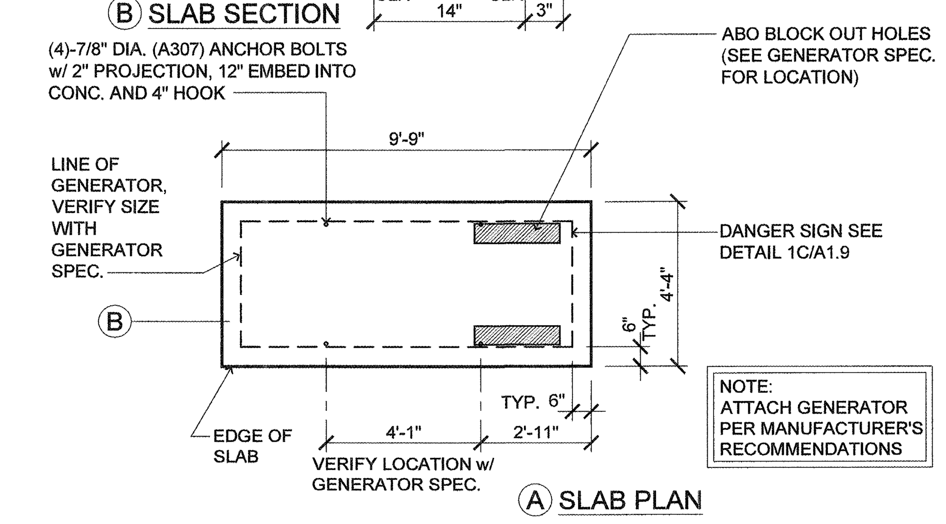

2 FLAG POLE (GROUND SET CONE)
SCALE: NOT TO SCALE   T:/10SPECLT/350FLAG/10350001

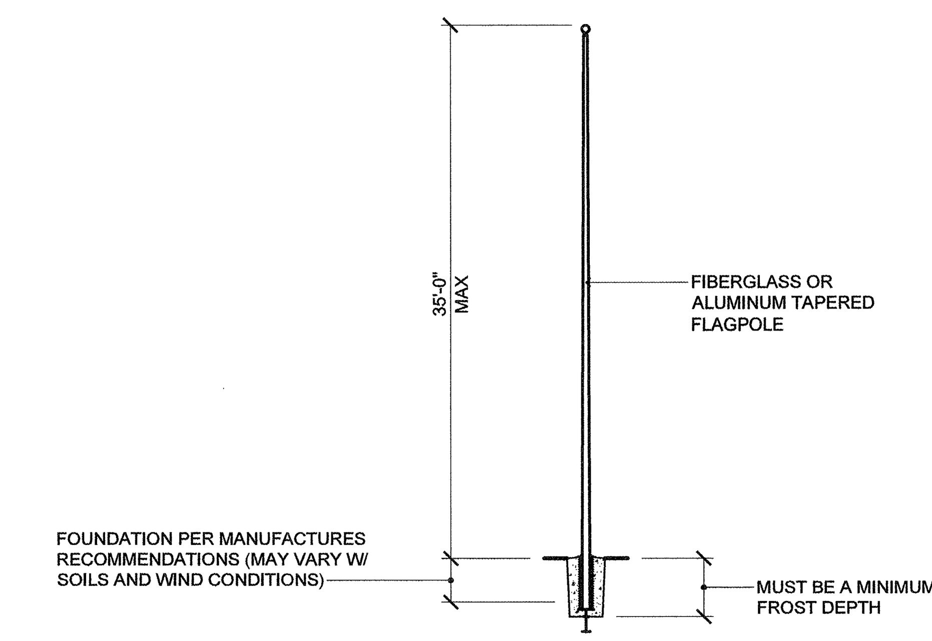

10 FIRE PIT SECTION
SCALE: 1" = 1'-0"   T:/02SITEWK/870FRNSH/02870026

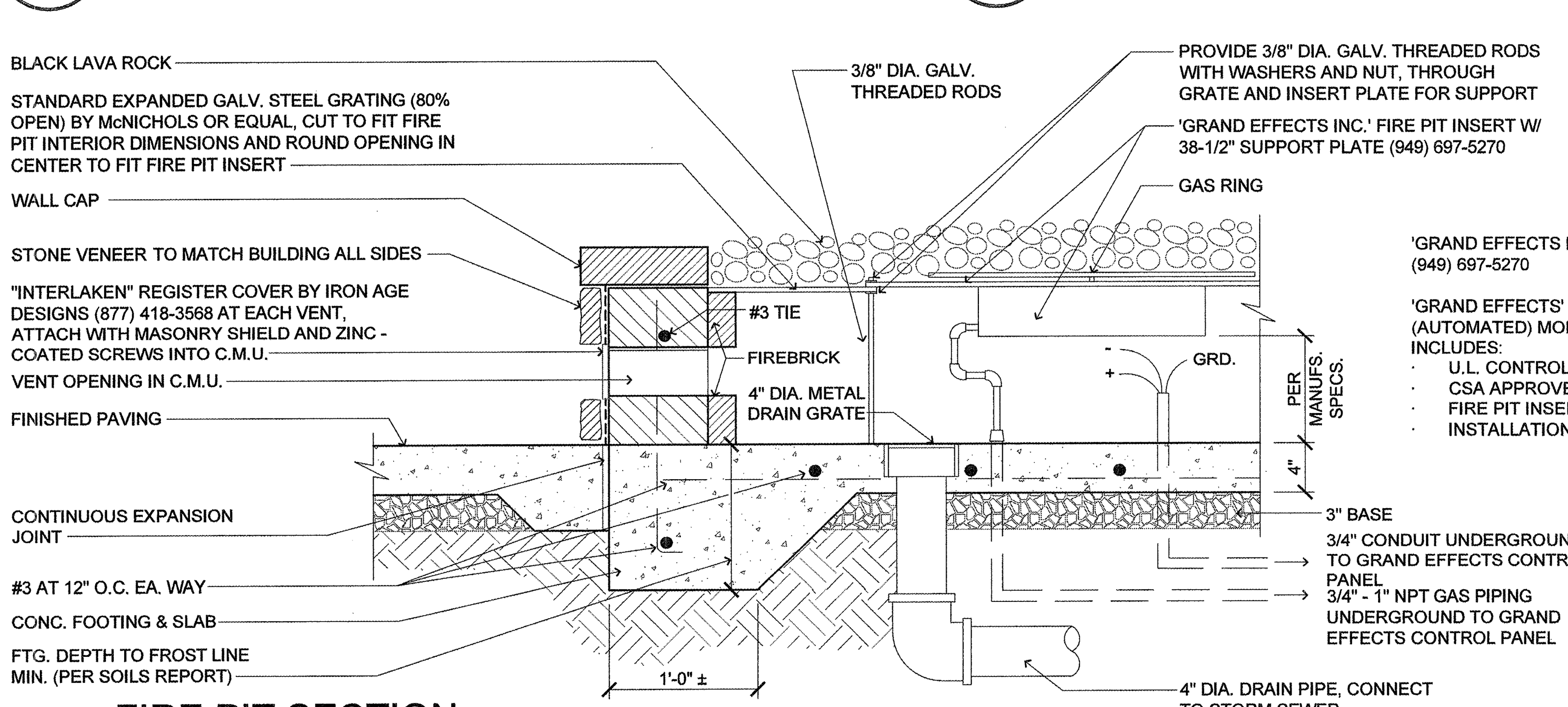

'GRAND EFFECTS INC.'
(949) 697-5270

'GRAND EFFECTS' FIRE PIT INSERT (AUTOMATED) MODEL 100A INCLUDES:
- U.L. CONTROL PANEL
- CSA APPROVED BURNER ASSEMBLY
- FIRE PIT INSERTS W/ SUPPORT PLATE
- INSTALLATION HARDWARE

8 FIREPIT
SCALE: 1/2" = 1'-0"   T:/02SITEWK/870FRNSH/02870047

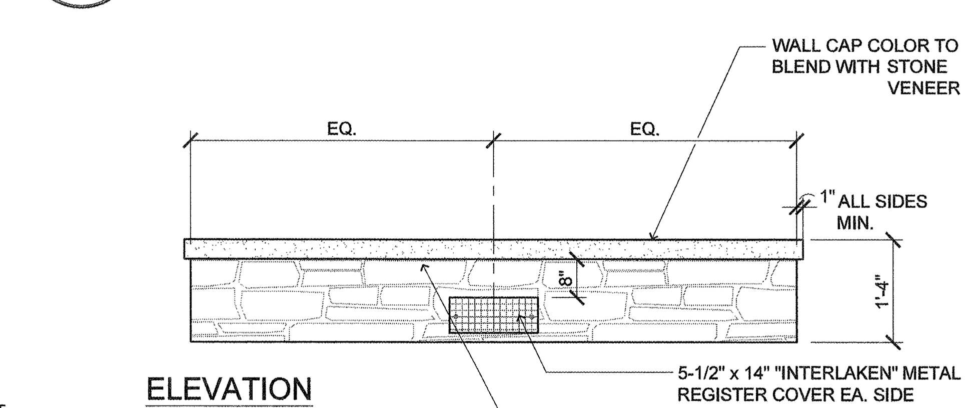

NOTES:
1. REFER TO ELECTRICAL PLANS AND ENLARGED SITE PLAN FOR PANEL LOCATION
2. PROVIDE KEY SWITCH, TIMER AND EMERGENCY SHUT-OFF

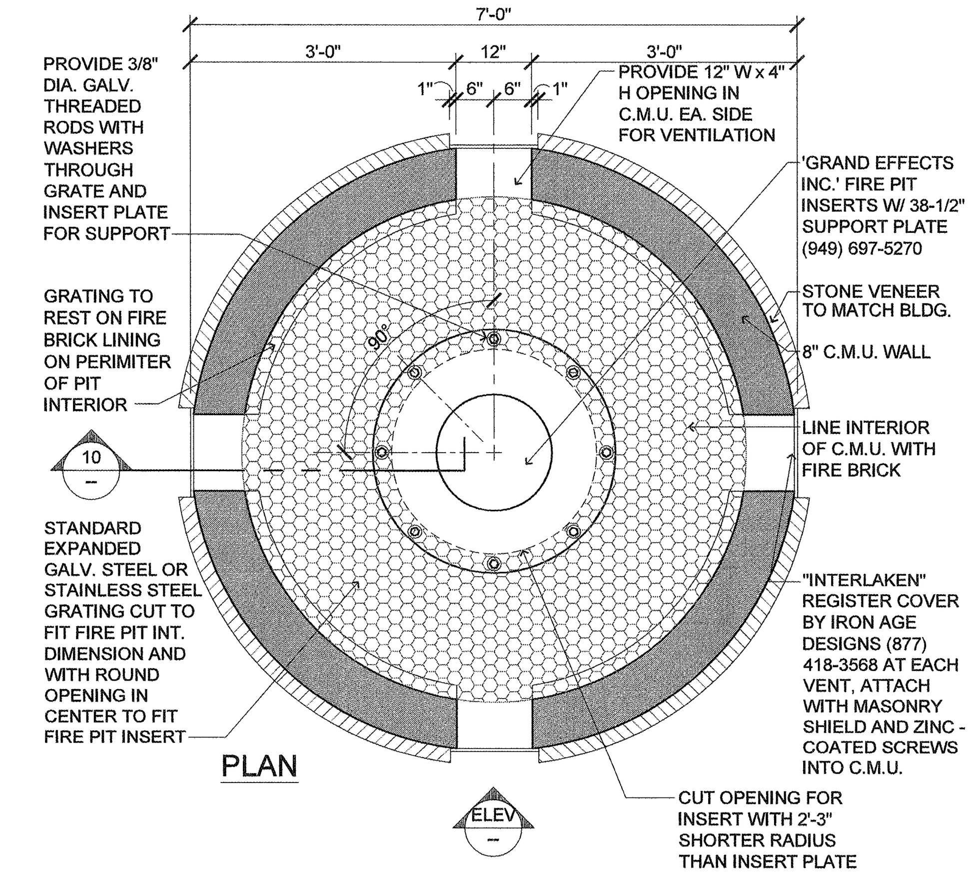

5 SITE STRUCTURE (CARPORT)
SCALE: NOT TO SCALE   T:/10SPECLT/534CARPT/10534001

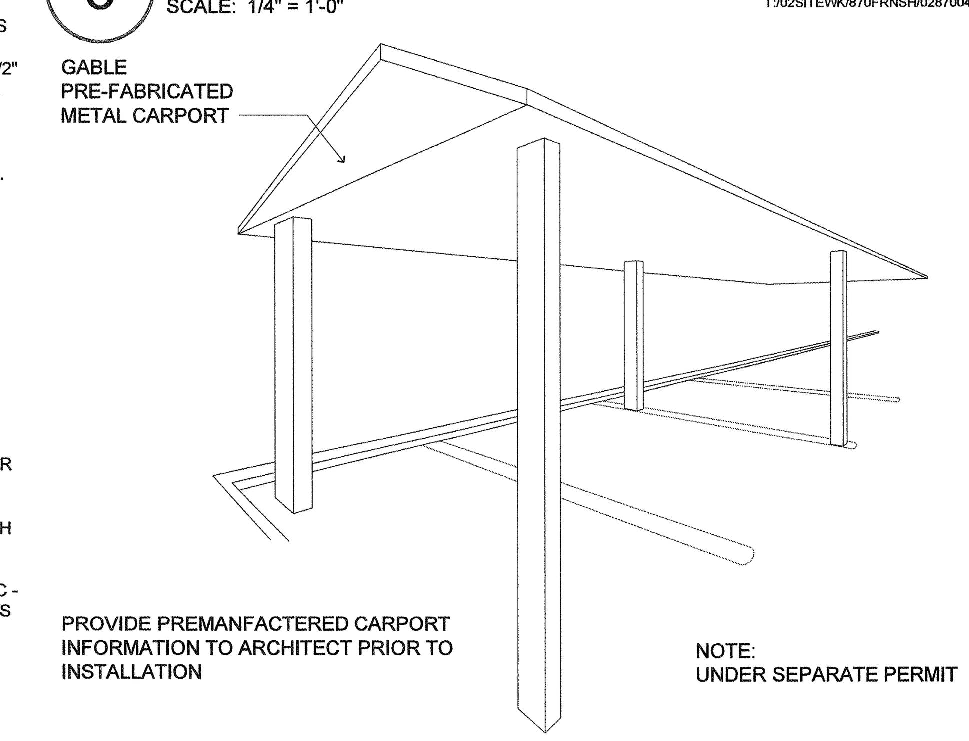

PROVIDE PREMANFACTERED CARPORT INFORMATION TO ARCHITECT PRIOR TO INSTALLATION

NOTE:
UNDER SEPARATE PERMIT

6

1 VAN ACCESSIBLE (PARKING SIGN)
SCALE: NOT TO SCALE   T:/02SITEWK/840APPND/02840004

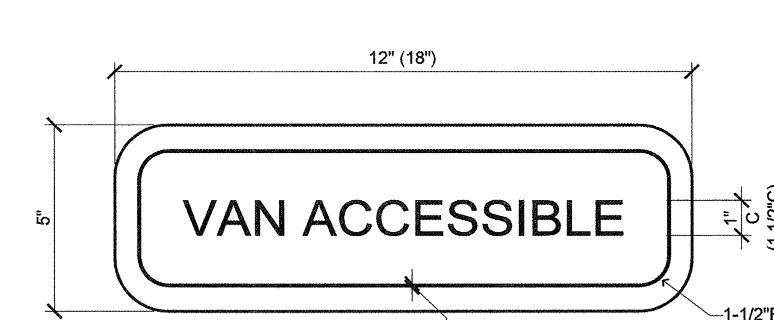

REGISTERED ARCHITECT
DANIEL ROACH
No. 3526
STATE OF MAINE

lenity architecture
3150 Kettle Court SE, Salem, Oregon 97301
P 503 399 1090 F 503 399 0565 W lenityarchitecture.com

COLSON AND COLSON
GENERAL CONTRACTOR, INC.
2260 McGILCHRIST STREET SE, SUITE 200
SALEM, OREGON, 97302
PHONE (503) 586-7401

PORTLAND
RETIREMENT RESIDENCE
802 OCEAN AVE. PORTLAND, MAINE 04103

SITE DETAILS

©2015 Lenity Architecture

DATE
8/28/2015

REVISED DATE
1 9/22/2015
2 2/2/2016
6 3/13/2017

SHEET
A1.8

save:3/23/2017 2:03 PM kristinam plot:3/24/2017 2:23 PM jasond file:p:\hawthorn\me-portland\arch\a1.8 sitework details.dwg A1.8