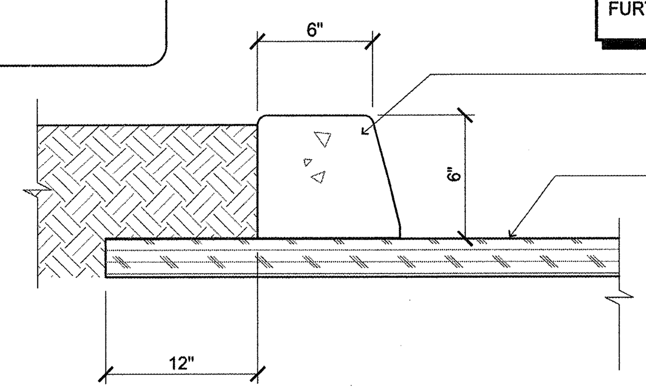

INTEGRAL CURB & GUTTER MAY BE USED, PER LOCAL JURISDICTION VERIFY W/ CIVIL DETAILS

NOTES:
1. SEE SOILS REPORT
2. EXPANSION JOINTS AT 40'-0" MAX, AND CONTROL JOINTS AT 3M (10'-0") MAX.

18 CURB DETAIL
(CURB / ASPHALT)
SCALE: 1 1/2" = 1'-0"
T:/02SITEWK/520PCPAV/02520006

NOTE: GUARDRAIL AND/OR SAFETY RAIL LOCATIONS PER LOCAL JURISDICTION REQUIREMENTS. VERIFY W/ ARCH. BEFORE FABRICATION

REFER TO CIVIL PLAN FOR FURTHER INFORMATION.

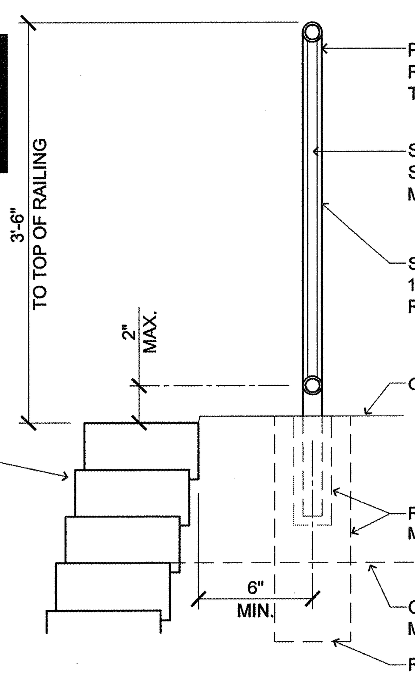

17 GUARD RAIL / SAFETY RAIL
(SECTION)
SCALE: NOT TO SCALE
T:/02SITEWK/276RTNWL/02276002

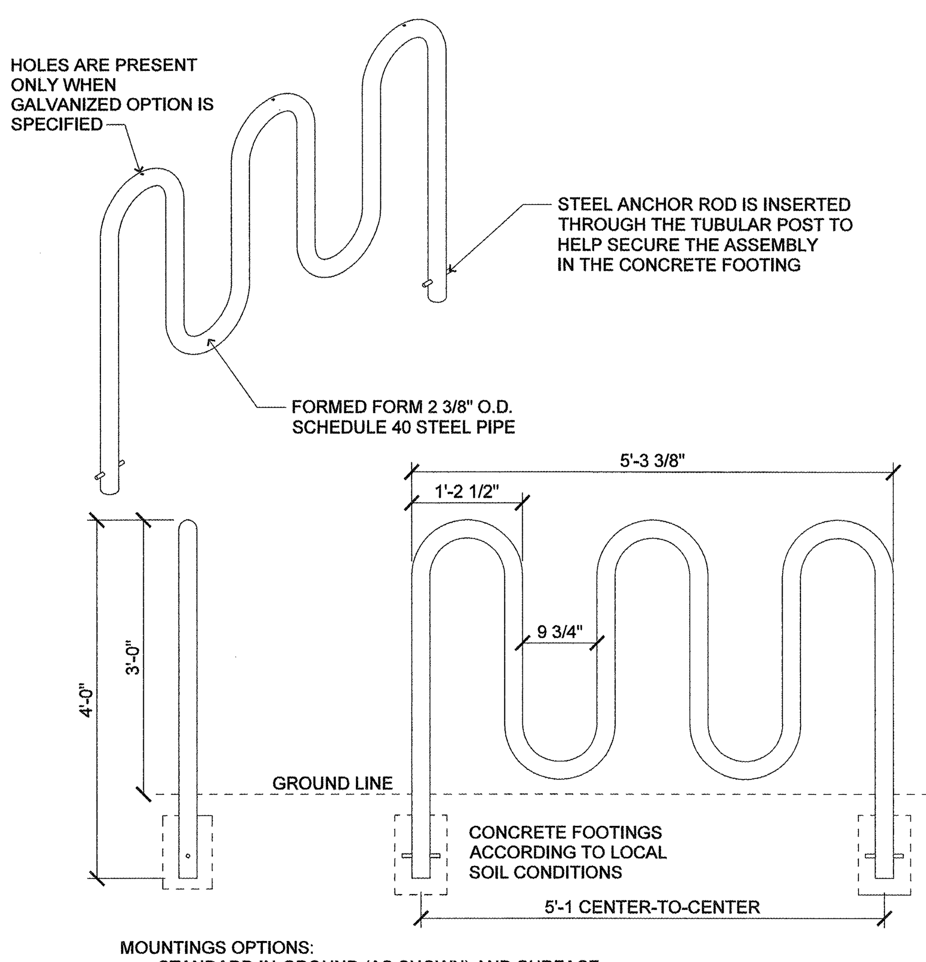

MOUNTINGS OPTIONS:
STANDARD IN-GROUND (AS SHOWN) AND SURFACE MOUNT WITH ROUND FLANGE

NOTES:
1. DRAWINGS NOT TO SCALE. DO NOT SCALE DRAWINGS.

14 BIKE RACK
(CYCLE SENTRY SERIES BRCS-105)
SCALE: NOT TO SCALE
T:/02SITEWK/830FENCE/02830025

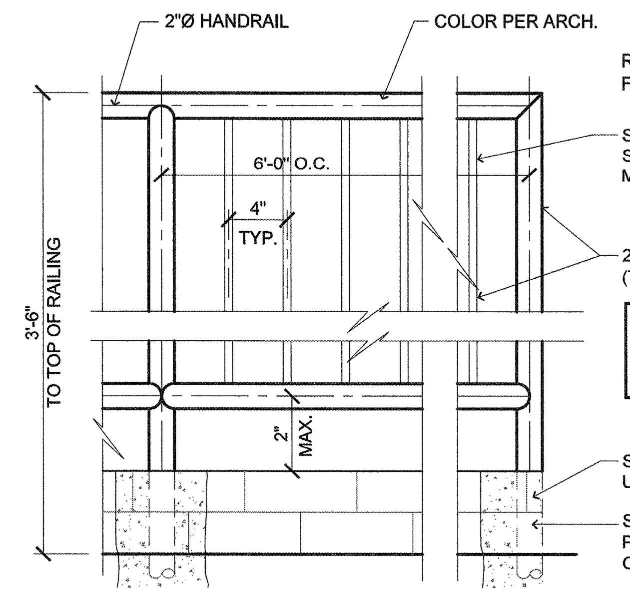

12 SAFETY RAILING DETAIL
(WALL EDGES)
SCALE: 1" = 1'-0"
T:/05METALS/520RAILG/05520022

REFER TO CIVIL PLAN FOR FURTHER INFORMATION.

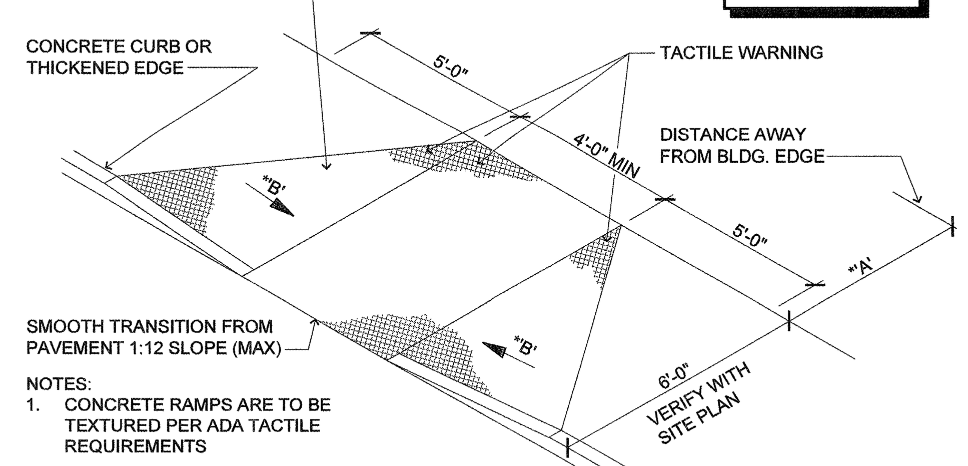

NOTES:
1. CONCRETE RAMPS ARE TO BE TEXTURED PER ADA TACTILE REQUIREMENTS
2. CONSTRUCTION MATERIALS FOR WHEEL CHAIR RAMP TO BE SIMILAR TO ADJACENT SIDEWALK.

* IF 'A' IS GREATER THAN OR EQUAL TO 4'-0" THEN 'B' IS 1:10 MAX. IF 'A' IS LESS THAN 4'-0" THEN 'B' IS 1:12 MAX.

8 SIDEWALK DETAIL
(ACCESS RAMP)
SCALE: NOT TO SCALE
T:/02SITEWK/520PCPAV/02520003

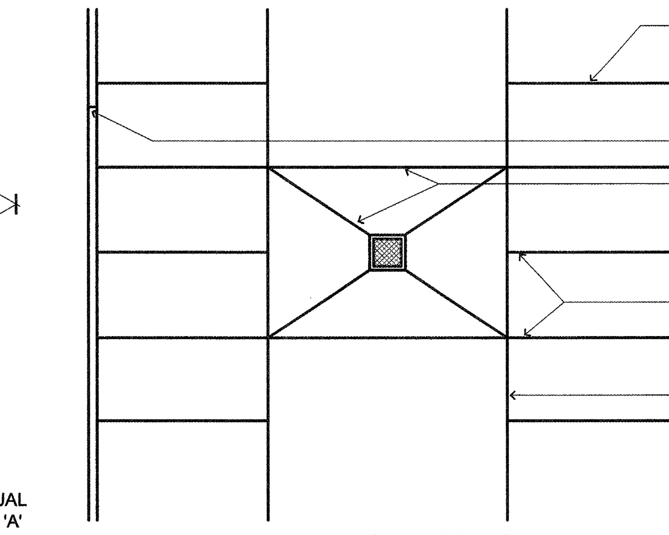

PARKING LOT PLAN

4 TYPICAL JOINT LAYOUT
(ALTERNATE CONCRETE PARKING)
SCALE: NOT TO SCALE
T:/02SITEWK/520PCPAV/02520010

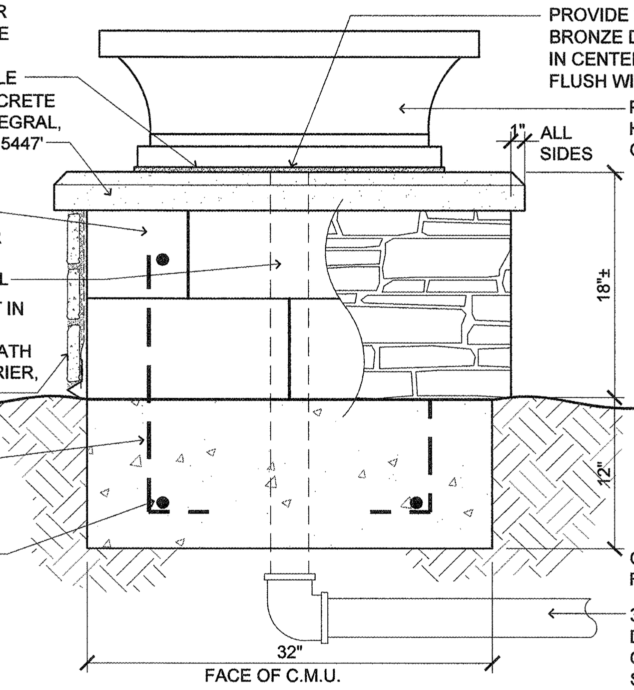

11 POTTERY COLUMN SECTION/ELEVATION
(GARDEN)
SCALE: 1" = 1'-0"
P:/HAWTHORN/ME-PORTLAND/DETAILS/02870033PS

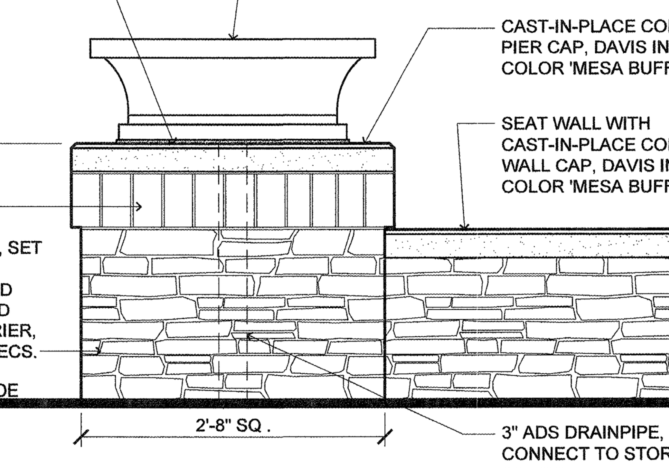

7 COLUMN / SEAT WALL
SCALE: 3/4" = 1'-0"
P:/HAWTHORN/ME-PORTLAND/DETAILS/02830019PS

REFER TO CIVIL PLAN FOR FURTHER INFORMATION.

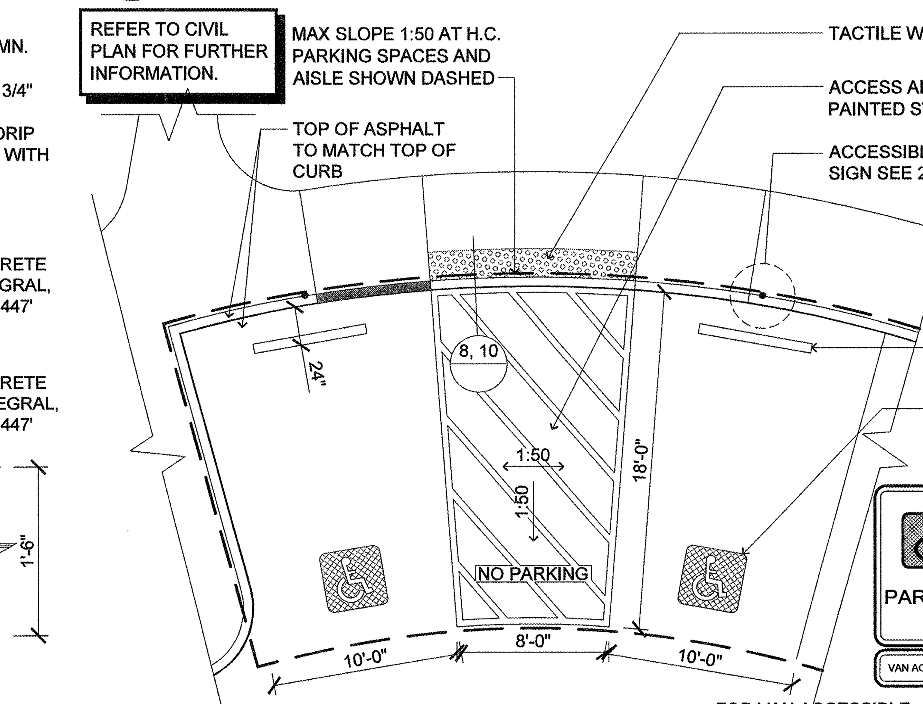

3 PARKING STALL
SCALE: 1/8" = 1'-0"
P:/HAWTHORN/ME-PORTLAND/DETAILS/02580001PS

NOTES:
1. SEE SOILS REPORT
2. EXPANSION JOINTS AT 40'-0" MAX, AND CONTROL JOINTS AT 10'-0" MAX.
3. SEE CIVIL DRAWINGS FOR ASPHALT SECT. & VERIFY WITH SOILS REPORT

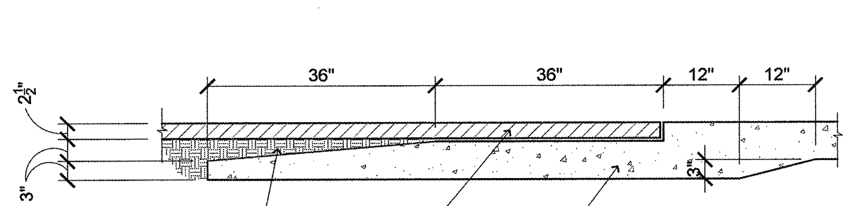

16 PAVEMENT TRANSITION
(PAVEMENT AND CONCRETE)
SCALE: 1/2" = 1'-0"
T:/02SITEWK/520PCPAV/02520025

STAIN, OLYMPIC SEMI-TRANSPERENT STAIN #730 OR EQUAL.

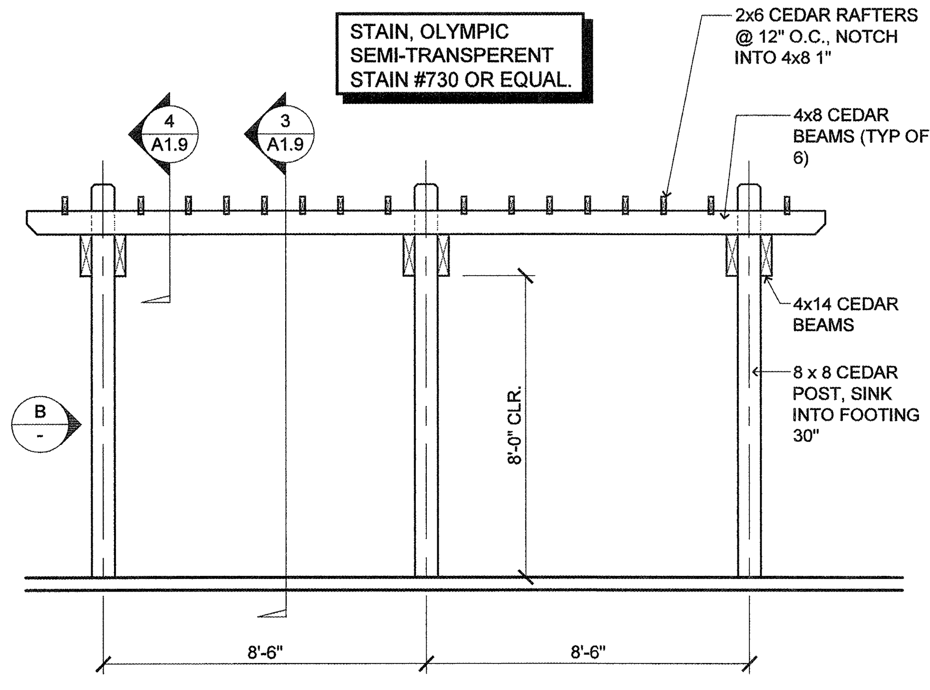

A - ELEVATION

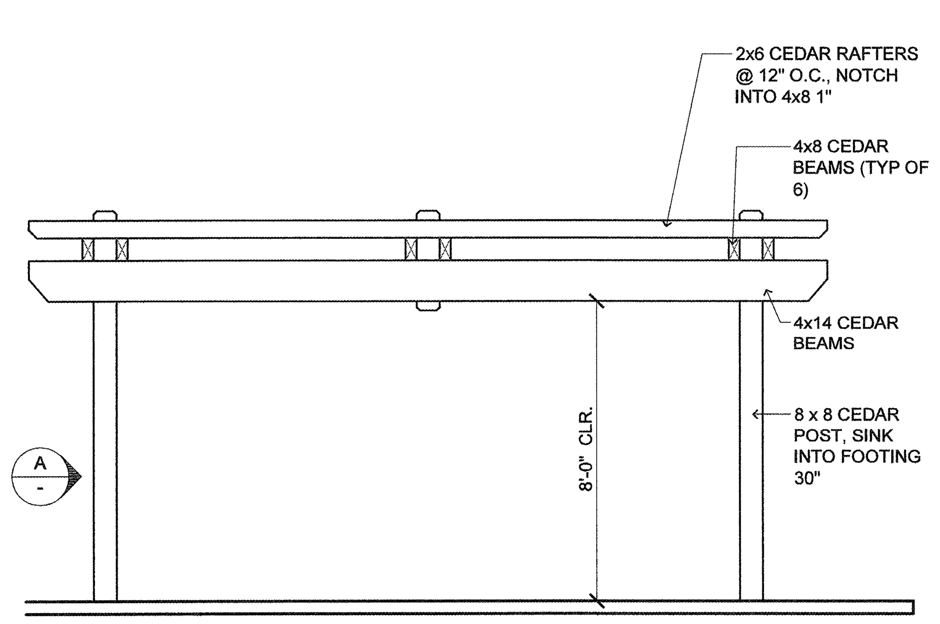

B - ELEVATION

13 ARBOR ELEVATIONS
SCALE: 1/4" = 1'-0"
P:/HAWTHORN/ME-PORTLAND/DETAILS/02870067PS

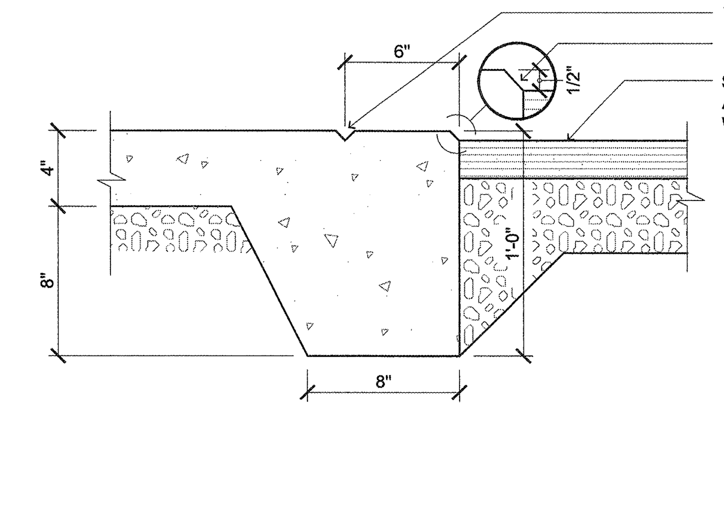

10 WALK DETAIL
(WALK / PAVING AT ENTRY)
SCALE: 1 1/2" = 1'-0"
T:/02SITEWK/520PCPAV/02520005

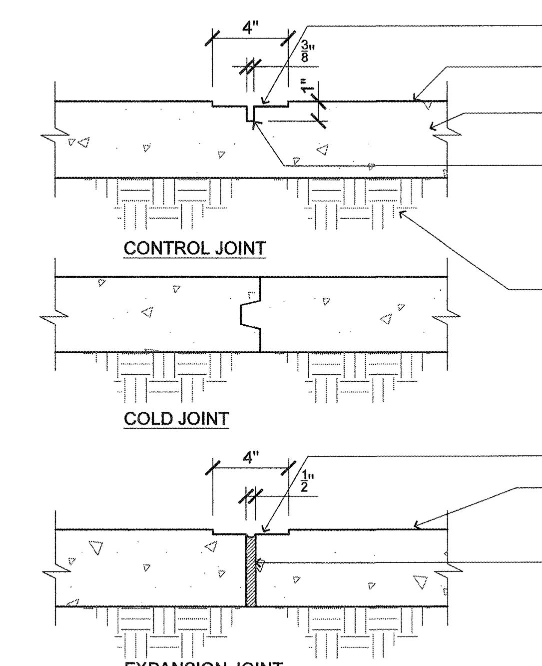

6 WALK/PATIO DETAIL
(CONCRETE WALK JOINTS)
SCALE: 1 1/2" = 1'-0"
T:/02SITEWK/520PCPAV/02520004

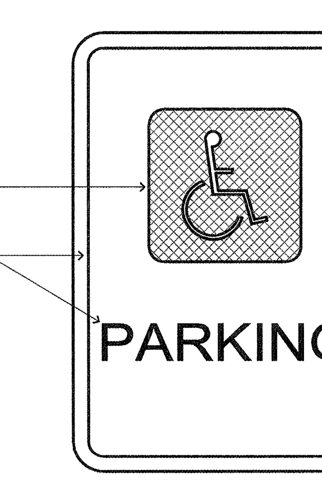

SIGN TO MEET ALL LOCAL REQUIREMENTS

A STANDARD R7-8 ACCESSIBLE PARKING SIGN SHALL BE USED TO MARK EACH PARKING SPACE. MINIMUM SIGN SIZE SHALL BE 12"x18". ALL SIGNS MUST BE PERMANENTLY MOUNTED IN THE GROUND OR ON A WALL. PORTABLE SIGNS SHALL NOT BE PERMITTED. THE ACCESSIBLE PARKING SIGN SHALL BE LOCATED ON A POST AT THE FRONT OF EACH PARKING SPACE. THE BOTTOM OF THE SIGN SHOULD BE A MAXIMUM HEIGHT OF SIX FEET FROM THE GROUND. IF THE PARKING SPACE IS HEADED INTO A BUILDING THE SIGN MAY BE FASTENED TO THE SIDE OF THE STRUCTURE.

2 PARKING SIGN
SCALE: NOT TO SCALE
T:/02SITEWK/840APPND/02840001

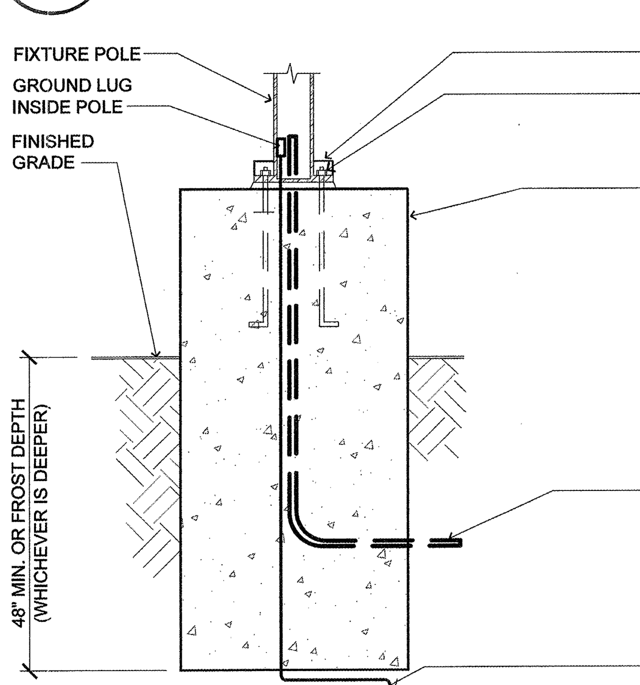

15 PARKING LOT LIGHT BASE
SCALE: 3/4" = 1'-0"
T:/02SITEWK/850YDLIT/02850001

REFER TO CIVIL PLAN FOR FURTHER INFORMATION.

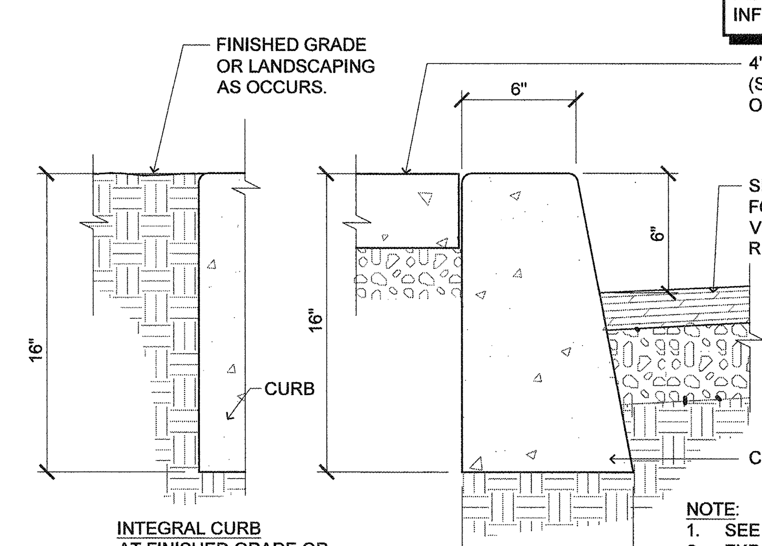

INTEGRAL CURB AT FINISHED GRADE OR LANDSCAPING

OR CITY STANDARD WHICHEVER IS GREATER
INTEGRAL CURB AT WALK

NOTE:
1. SEE SOILS REPORT
2. EXPANSION JOINTS AT 40'-0" MAX, AND CONTROL JOINTS AT 10'-0" MAX.
3. VERIFY W/ CIVIL DETAILS

9 CURB DETAIL
(SIDEWALK / CURB / ASPHALT)
SCALE: 1 1/2" = 1'-0"
T:/02SITEWK/520PCPAV/02520002

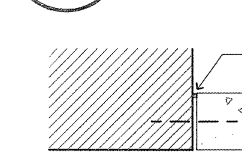

INSTALL 1/2"Ø x 12"L AT 24" O.C. SMOOTH STEEL DOWEL W/ GREASE AT ONE END - INSTALL WHEN REQ'D BY SOILS ENGINEER.

NOTE: USE AT ALL FIXED OBJECTS WITHIN OR ABUTTING PAVED AREA.

ISOLATION EXPANSION JOINT

GENERAL NOTES:
1. POUR CONCRETE IN CHECKER BOARD FASHION AS PER JOINT LAYOUT (SEE PLAN)
2. ALL LONGITUDINAL JOINTS MAYBE CONST JOINTS AT CONTRACTORS OPTION TRANSVERSE CONSTR JOINTS SHALL BE INSTALLED WHENEVER THE PLACING OF CONCRETE IS SUSPENDED A SUFFICIENT LENGTH OF TIME THAT THE CONCRETE MAY BEGIN TO HARDEN.
3. SEE ARCHITECTURAL & LANDSCAPE SITE PLANS FOR COLORED CONCRETE & DECORATIVE STAMPED PATTERN LOCATIONS.
4. REFER TO SOILS INVESTIGATION REPORT FOR ADDITIONAL PAVEMENT INSTALLATION SPECIFICATIONS

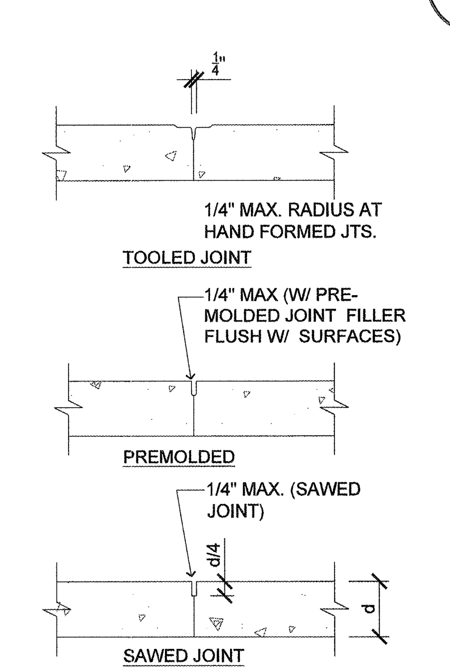

CONSTRUCTION JOIINTS

5 TYPICAL JOINT CONSTRUCTION
(ALTERNATE CONCRETE PARKING)
SCALE: 1 1/2" = 1'-0"
T:/02SITEWK/520PCPAV/02520011

6
NOT USED

1

REGISTERED ARCHITECT DANIEL ROACH No. 3526 STATE OF MAINE

lenity architecture
3150 Kettle Court SE, Salem, Oregon 97301
P 503 399 1090 F 503 399 0565 W lenityarchitecture.com

COLSON AND COLSON GENERAL CONTRACTOR, INC.
2260 McGILCHRIST STREET SE, SUITE 200
SALEM, OREGON, 97302
PHONE (503) 586-7401

PORTLAND RETIREMENT RESIDENCE
802 OCEAN AVE. PORTLAND, MAINE 04103

©2015 Lenity Architecture

SITE DETAILS

DATE
8/28/2015

REVISED DATE
1 9/22/2015
2 2/2/2016
6 3/13/2017

SHEET
A1.7

save:8/23/2016 1:38 PM kristinam plot:4/3/2017 9:32 AM kristinam file:p:\hawthorn\me-portland\arch\a1.7 sitework details.dwg A1.7