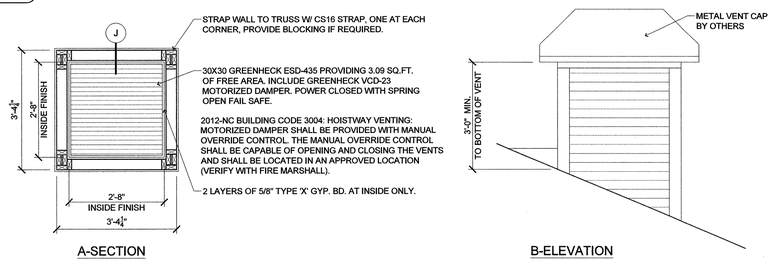

17 ELEVATOR VENTING
SHALL COMPLY WITH ALL OF 2012-NC BUILDING CODE CHAPTER 30
SCALE: 1/2" = 1'-0"

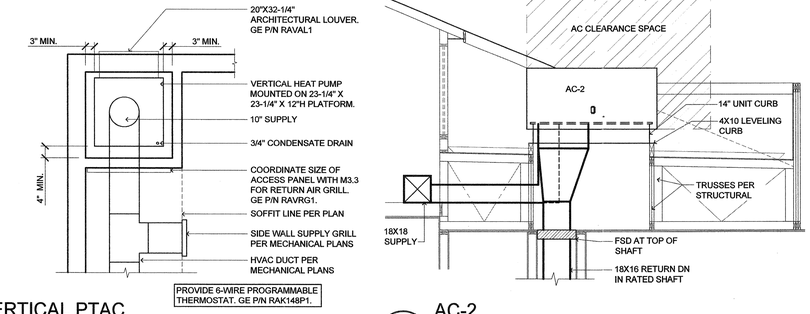

10 VERTICAL PTAC
TYPICAL CLOSET DETAIL
SCALE: 1/2" = 1'-0"
T:/15MECH/500HVAC/15500203

6 AC-2
(SECTION)
SCALE: 1/4" = 1'-0"
T:/15MECH/500HVAC/15500087

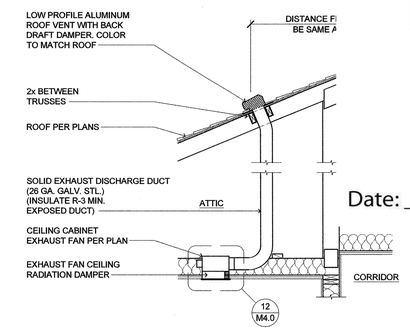

3 CEILING EXHAUST FAN TERMINATION
(AT ATTIC SPACE)
SCALE: N.T.S.
T:/15MECH/500HVAC/15500182

Inspections Division
Date: 10/25/16

NOT USED

16

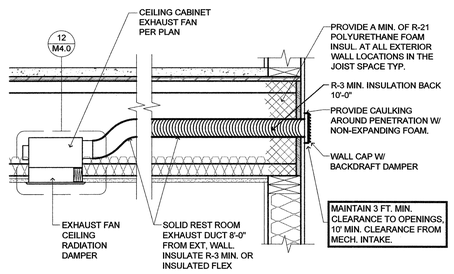

13 CEILING EXHAUST FAN TERMINATION
(AT EXT. WALL, FLOOR SPACES)
SCALE: N.T.S.
T:/15MECH/500HVAC/15500102

1. SQUARE AND RECTANGULAR HOLES ARE NOT PERMITTED.
2. THE HORZ. DISTANCE BETWEEN HOLES SHALL BE AT LEAST 2 TIMES THE DIA. OF THE LARGER HOLE.
3. DO NOT DRILL MORE THAN 3 ACCESS HOLES IN ANY 4' LONG SECTION OF THE BEAM.
4. BEAMS DEFLECT UNDER LOAD. SIZE HOLES TO PROVIDE CLEARANCE WHERE REQUIRED.
5. THE HOLE CHART IS VALID FOR BEAMS SUPPORTING UNIFORM LOAD ONLY.
6. DO NOT STACK HOLES VERTICALLY
7. MAY REQUIRE ENGINEERING REVIEW

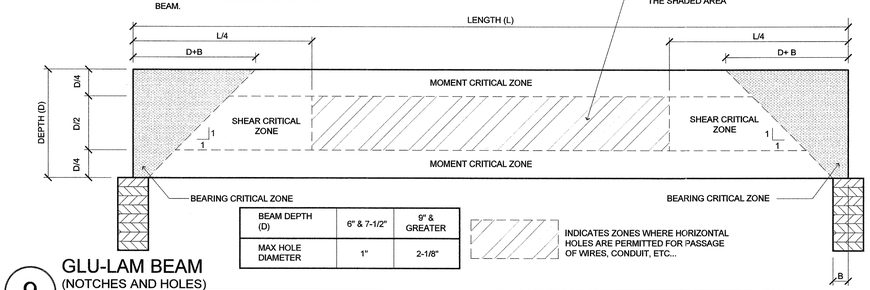

BEAM DEPTH (D)	6" & 7-1/2"	9" & GREATER
MAX HOLE DIAMETER	1"	2-1/8"

9 GLU-LAM BEAM
(NOTCHES AND HOLES)
SCALE: 1" = 1'-0"
T:/15MECH/500HVAC/15500102

NOT USED

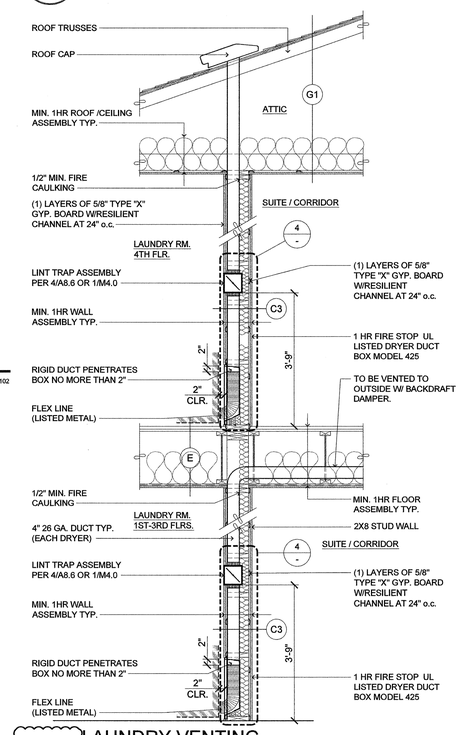

2 LAUNDRY VENTING
SCALE: 1/2" = 1'-0"
T:/15MECH/500HVAC/15500022-4STRY
5

NOT USED

15

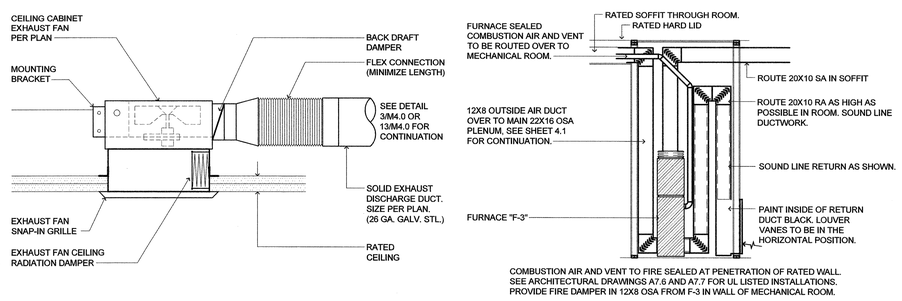

12 CEILING EXHAUST FAN
SCALE: N.T.S.
T:/15MECH/500HVAC/15500204

8 THEATER FURNACE SECTION
(DUCT ROUTING)
SCALE: N.T.S.
T:/15MECH/500HVAC/15500214

5

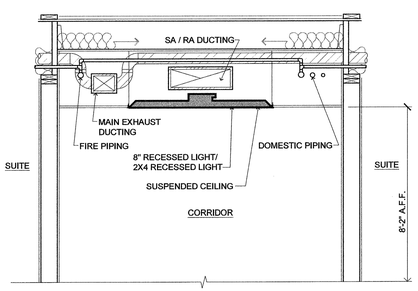

14 CORRIDOR SECTION
(MEP LAYOUT)
SCALE: 1/2" = 1'-0"
T:/15MECH/500HVAC/15500102ABC
5

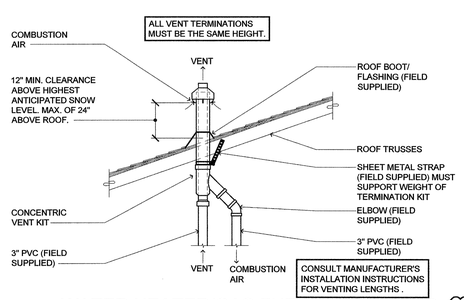

11 WATER HEATER/GAS FURNACE VENTING
(VENT/COMBUSTION AIR CONCENTRIC VENT)
SCALE: N.T.S.
T:/15MECH/500HVAC/15500206

7
5

NOT USED

NUMBER OF 90° TURNS OR ELBOWS	TYPE OF VENT	VENT LENGTH CHART- MODEL DNCD450EG 2-1/2" ANGLED HOODS	VENT LENGTH CHART-MODEL DNCD450EG 4" ANGLED OR LOUVERED HOODS	VENT LENGTH CHART- MODEL GTDL210GD 4" ROUND LONG VENTING
0	RIGID METAL	60 ft.	80 ft.	150 ft.
1	RIGID METAL	45 ft.	60 ft.	135 ft.
2	RIGID METAL	35 ft.	45 ft.	125 ft.
3	RIGID METAL	25 ft.	35 ft.	115 ft.
4	RIGID METAL	15 ft.	25 ft.	105 ft.

GENERAL ELECTRIC 7.0, 6.0, AND 5.8 CU. FT. CAPACITY GAS DRYERS

4 DRYER VENTING
(EXHAUST LENGTHS)
SCALE: NTS
T:/15MECH/500HVAC/15500060

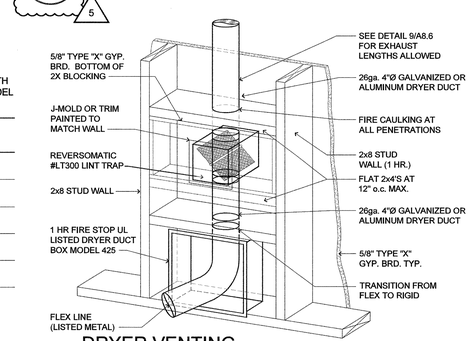

1 DRYER VENTING
SCALE: 1" = 1'-0"
T:/15MECH/500HVAC/15500023

©2015 Lenity Architecture

len architecti
3150 Kettle Court SE, S
p 503 399 1090 f 503 399 0GE

COLSON AND COLSON GENERAL CONTRACTOR, INC.
2260 McGILCHRIST STREET SE, SUITE 200
SALEM, OREGON, 97302
PHONE (503) 586-7401

PORTLAND RETIREMENT RESIDENCE
802 OCEAN AVE. PORTLAND, MAINE 04103

HVAC DETAILS

DATE
8/28/2015

REVISED DATE
1 9/22/2015
2 2/2/2016
5 7/18/2016

SHEET
M4.0

save:8/25/2016 11:36 AM (pelp pio:8/25/2016 11:37 AM jost plot8 file:p:\hsa\from\nss-portland\mechhvac\4.0 hvac-details.dwg M4.0