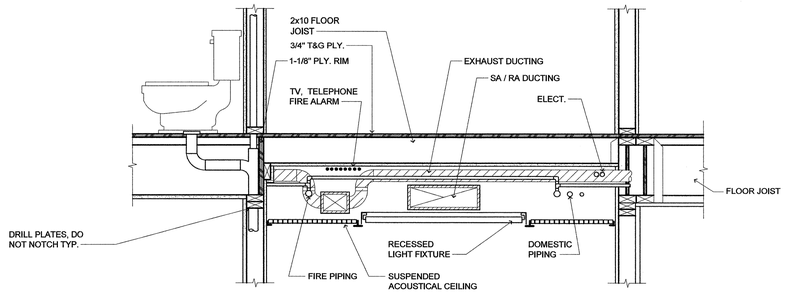

14 SCHEMATIC - SECTION AT CORRIDOR WOOD CONSTRUCTION
(ALL TRADES TO COORDINATE AVAILABLE SPACE)

SCALE: N.T.S.

T:/15MECH/500HVAC/15500096A

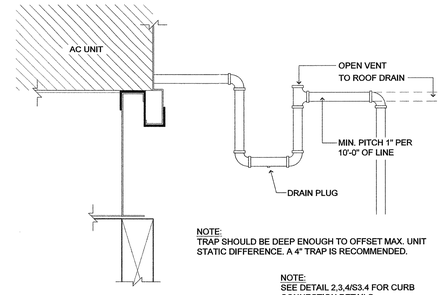

NOTE:
TRAP SHOULD BE DEEP ENOUGH TO OFFSET MAX. UNIT STATIC DIFFERENCE. A 4" TRAP IS RECOMMENDED.

NOTE:
SEE DETAIL 2,3,4/63.4 FOR CURB CONNECTION DETAILS
SEE DETAIL 2/A7.2a FOR FLASHING.

7 ROOFTOP A/C UNIT
(TRAP CONDENSATE DRAIN)

SCALE: 3"=1'-0"

T:/15MECH/500HVAC/15500107

NOTES:
1. FIRE RATED PARTITION. COORDINATE WITH ARCHITECTURAL FOR FRAMING AND FIRE RATED LINING REQUIREMENTS.
2. COORDINATE PARTITION OPENING, 1/8" LARGER THAN FIRE DAMPER SLEEVE PER FOOT OF WIDTH OR HEIGHT.
3. PROVIDE SLEEVE 3" BEYOND EDGE OF PARTITION, EACH SIDE.
4. FIRE DAMPER FRAME ATTACHED TO SLEEVE BY MANUFACTURER.
5. "S" TYPE DUCT CONNECTION. DO NOT SCREW OR BOLT.
6. 1-1/2"x1-1/2"X16 GA. ANGLE ALL AROUND SLEEVE. INSTALL PER SMACNA STANDARDS AND PER DAMPER MANUFACTURER'S INSTRUCTIONS.
7. PROVIDE DUCT ACCESS DOOR. COORDINATE LOCATION AND TYPE OF ARCHITECTURAL SERVICE ACCESS WITH ARCHITECTURAL. LABEL "FIRE SMOKE DAMPER" IN 1/2" LETTERS
8. DAMPER ACTUATOR. MOUNT EXTERNAL OF DUCT ON DAMPER SLEEVE. BY DAMPER MANUFACTURER.

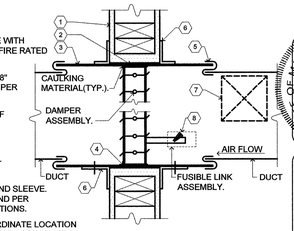

GENERAL NOTES:
DETAIL INDICATES REQUIREMENTS FOR STANDARD FRAME INSTALLATION. REFERENCE "SMACNA FIRE, SMOKE AND RADIATION DAMPER INSTALLATION GUIDE" FOR OTHER CONFIGURATION REQUIREMENTS. COMPLY FULLY WITH ABOVE MENTIONED AND ALSO AHJ REQUIREMENTS IN ALL CASES.

3 FIRE SMOKE DAMPER
(DUCT MOUNTED)

SCALE: N.T.S.

T:/15MECH/500HVAC/15500181

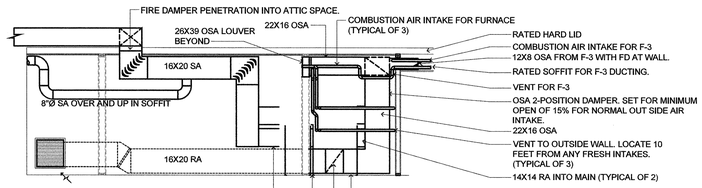

NOTE:
PACKAGE ECONOMIZER SECTION WITH CONTROL SYSTEM COMPATIBLE WITH COMBINATION PROGRAMMABLE THERMOSTAT AND CO2 SENSOR. SET CO2 SENSOR FOR 700 PPM TO ACTIVATE ECONOMIZER TO OPEN TO FULL POSITION UNTIL SENSOR IS SATISFIED. THERMOSTAT TO BE CONTROLLED BY OUTDOOR AIR ENTHALPY. MANUFACTURERS: CANFAB, MICROMETL OR APPROVED.

12 MECHANICAL ROOM ELEVATION
(TWIN SYSTEM FEEDING ACTIVITY ROOM)

SCALE: N.T.S.

T:/15MECH/500HVAC/15500215

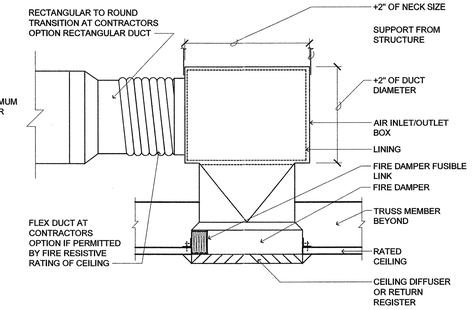

6 CEILING AIR TERMINAL FIRE DAMPER

SCALE: N.T.S.

T:/15MECH/500HVAC-15500005

ALLOWABLE HOLES CHART

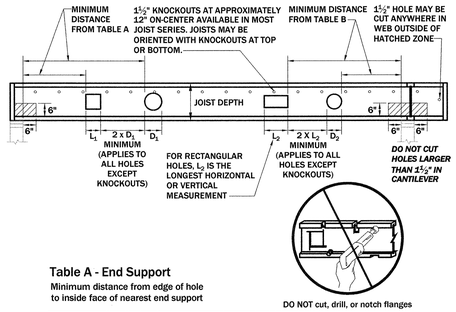

DO NOT cut, drill, or notch flanges

Table A - End Support
Minimum distance from edge of hole to inside face of nearest end support

Joist Depth	Joist Series	Round Hole Size									
		2"	4"	6"	8"	10"	12"	14"	16"	18"	20"
		Square or Rectangular Hole Size									
		1.25"	2.5"	4"	5"	6"	7"	8.5"	9.5"	10.5"	13"
9½"	I45 / I65	1'-6"	*3'-0"*	*5'-0"*	-	-	-	-	-	-	-
18"	I90 / I90H	1'-0"	1'-0"	2'-6"	5'-0"	7'-0"	9'-6"	*12'-6"*	-	-	-

Table B - Intermediate or Cantilever Support
Minimum distance from edge of hole to inside face of nearest intermediate or cantilever support

Joist Depth	Joist Series	Round Hole Size									
		2"	4"	6"	8"	10"	12"	14"	16"	18"	20"
		Square or Rectangular Hole Size									
		1.25"	2.5"	4"	5"	6"	7"	8.5"	9.5"	10.5"	13"
9½"	I45 / I65	1'-6"	*4'-0"*	*6'-6"*	-	-	-	-	-	-	-
18"	I90 / I90H	1'-0"	1'-0"	2'-6"	5'-6"	9'-0"	12'-6"	*17'-0"*	-	-	-

2 INSTALLATION DETAIL
(I-JOIST ALLOWABLE HOLE CHART)

SCALE: NOT TO SCALE

T:/06WD&PLS/170PRF/AB/06170002

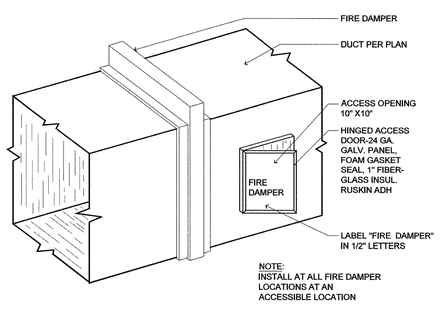

NOTE:
INSTALL AT ALL FIRE DAMPER LOCATIONS AT AN ACCESSIBLE LOCATION

11 FIRE DAMPER ACCESS DOOR

SCALE: N.T.S.

T:/15MECH/500HVAC/15500018

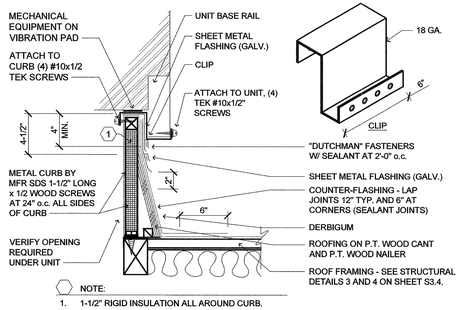

NOTE:
1. 1-1/2" RIGID INSULATION ALL AROUND CURB.

9 UNIT CURB
(W/ SEISMIC CLIP SUPPORT)

SCALE: N.T.S.

T:/15MECH/500HVAC/15500211

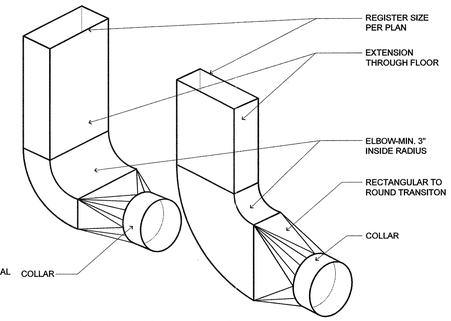

5 DUCT CONNECTION
(RECTANGLE TO ROUND)

SCALE: N.T.S.

T:/15MECH/500HVAC/15500019

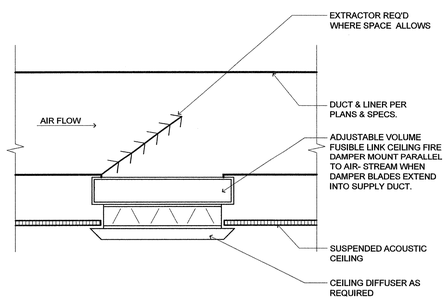

10 CEILING DIFFUSER
(DUCT MOUNTED)

SCALE: NOT TO SCALE

T:/15MECH/500HVAC/15500016

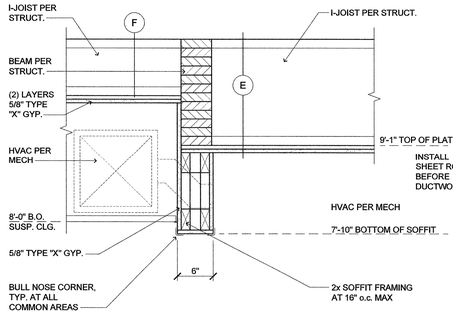

8 SOFFIT DETAIL
(TV ROOM)

SCALE: 1"=1'-0"

T:/06FINISH/250GYPBD/09250020

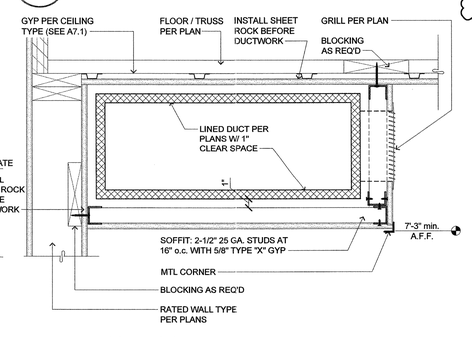

4 TYPICAL SOFFIT DTL.

SCALE: 1-1/2" = 1'-0"

T:/15MECH/500HVAC/15500058

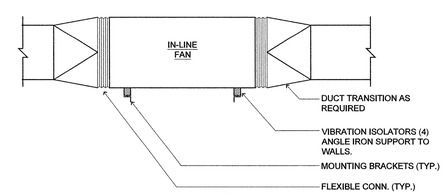

1 IN-LINE FAN MOUNTING

SCALE: NOT TO SCALE (1:1)

T:/15MECH/500HVAC/15500002

NOTE: PENETRATIONS OF AREA SEPERATION WALLS SHALL BE PROTECTED WITH THROUGH-PENETRATION FIRE STOPS AND MEMBRANE PENETRATION FIRE STOPS

lenity architecture
3730 Kettle Court S.E. Salem, Oregon 97301
p 503 399 1090 f 503 399 8560 www.lenityarchitecture.com

STATE OF MAINE Robert L. Hazleton 10527 LICENSED PROFESSIONAL ARCHITECT

COLSON AND COLSON GENERAL CONTRACTOR, INC.
2260 McGILCHRIST STREET SE, SUITE 200
SALEM, OREGON, 97302
PHONE (503) 586-7401

PORTLAND RETIREMENT RESIDENCE
802 OCEAN AVE. PORTLAND, MAINE 04103

HVAC DETAILS

©2015 Lenity Architecture

DATE
8/28/2015

REVISED DATE
1 9/22/2015
2 2/2/2016
5 7/18/2016

SHEET
M4.1

save 7/21/2016 10:10 AM jeddy plot 8/28/2015 9:41 AM jeddy plot jeddy file:p:\lewis\forms-eprints\lanc\lewis\m4.1 hvac details.dwg M4.1