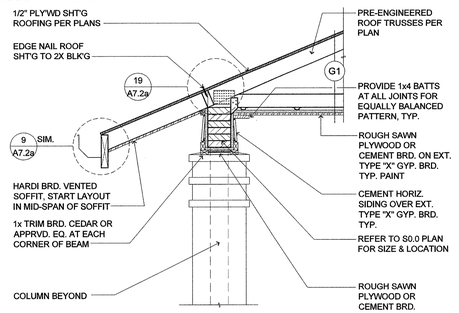

8 EXTERIOR TRUSS BLOCKING
(ROOF AT CANOPY)
SCALE: 3/4" = 1'-0"
T:/06MDAPLS/111RFFRM0011111ST

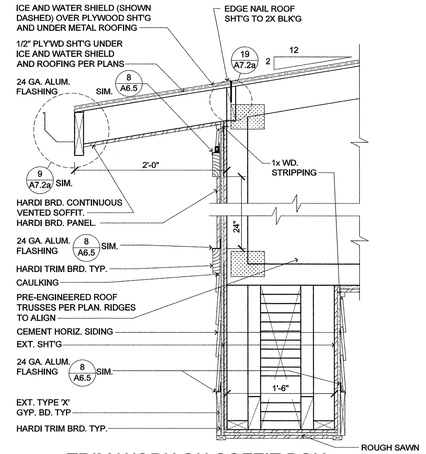

7 TRIM WORK ON SOFFIT BOX
(ENTRY CANOPY)
SCALE: 1/2" = 1'-0"
T:/09FINISH/980WOOD/09980079

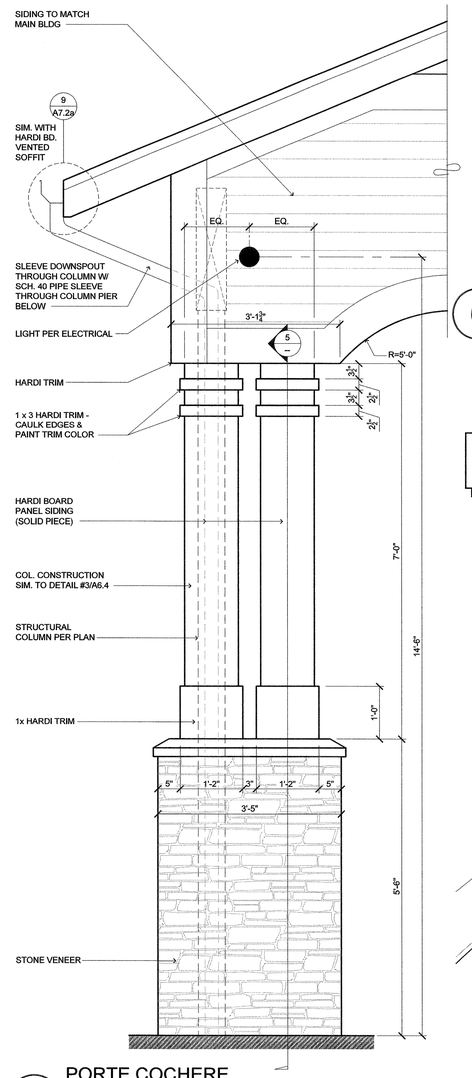

2 PORTE COCHERE
SCALE: 3/4"=1'-0"
T:/09FINISH/980WOOD/09980052

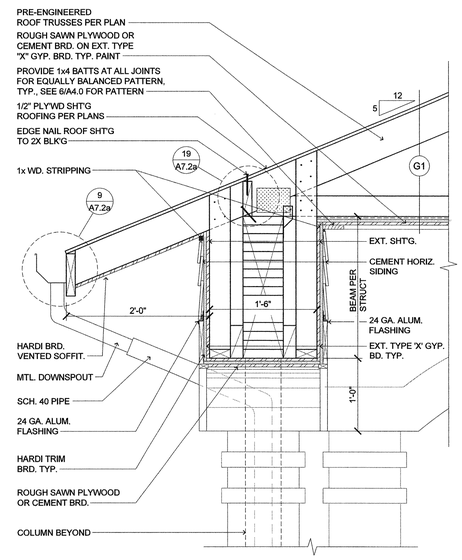

4 TRIM WORK ON SOFFIT BOX
(ENTRY CANOPY)
SCALE: 1"=1'-0"
T:/09FINISH/980WOOD/09980051

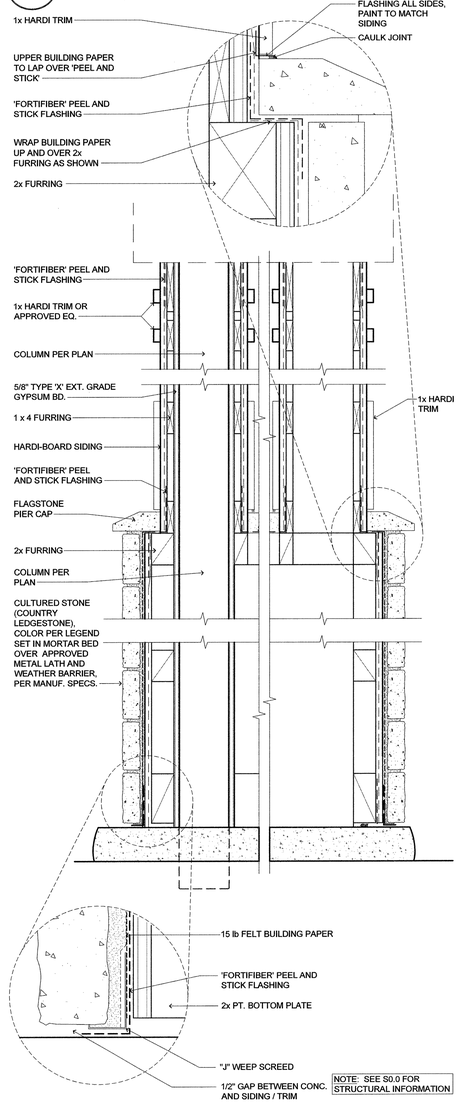

5 ENTRY CANOPY COLUMN
(TRIM AND FLASHING)
SCALE: 1 1/2"=1'-0"
T:/09FINISH/980WOOD/09980053

NOTE:
ENTRY CANOPY TO BE SPRINKLED PER NFPA 13. ROUTE SPRINKLER PIPING FROM LOWER ROOF TO LARGE COLUMN TO UPPER ROOF, NO EXCEPTIONS.

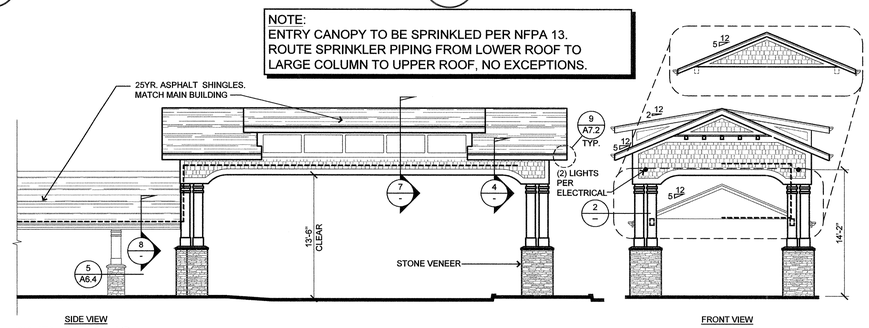

3 ELEVATIONS
(COVERED ENTRY CANOPY)
SCALE: 1/8" = 1'-0"

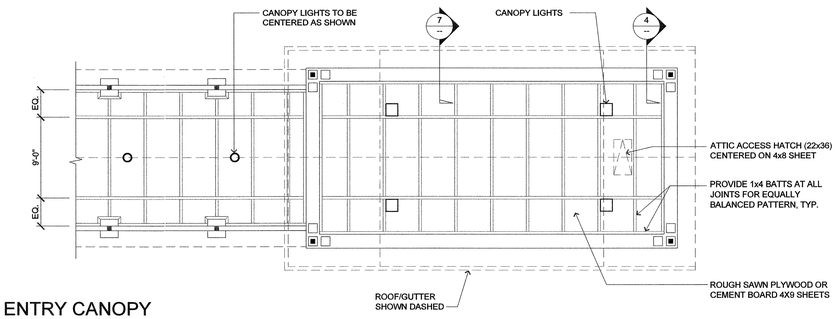

6 ENTRY CANOPY
(TYPICAL CEILING LAYOUT)
SCALE: 1/8" = 1'-0"
T:/09FINISH/980WOOD/09980092

NOTE:
ICE AND WATER SHIELD TO BE APPLIED TO THE ENTIRE 2:12 SECTION OF THE ENTRY CANOPY.

NOTE:
WRAP ENTIRE EXTERIOR OF BUILDING WITH BLDG PAPER. ALL JOINTS TO BE TAPED WITH SHEATHING TAPE. SYSTEM MUST BE INSTALLED IN ACCORDANCE WITH MANUF. INSTALLATION INSTRUCTIONS TO PROVIDE 10 YR. WARRANTY TO GENERAL CONTRACTOR

SEE DETAIL 1 AND 3 ON S2.3 FOR ALLOWABLE BORING / NOTCHING OF MEMBERS.

SEE SHT. A1.1 SITE FOR ADDITIONAL INFORMATION AND NOTES.

SEE SHT S0.0 FOR STRUCTURAL INFORMATION AND DIMENSIONS AND ADDITIONAL NOTES.

SEE "E" SHT FOR ELECTRICAL INFORMATION AND ADDITIONAL NOTES.

SEE ROOF PLAN FOR D.S. AND ROOF SLOPE.

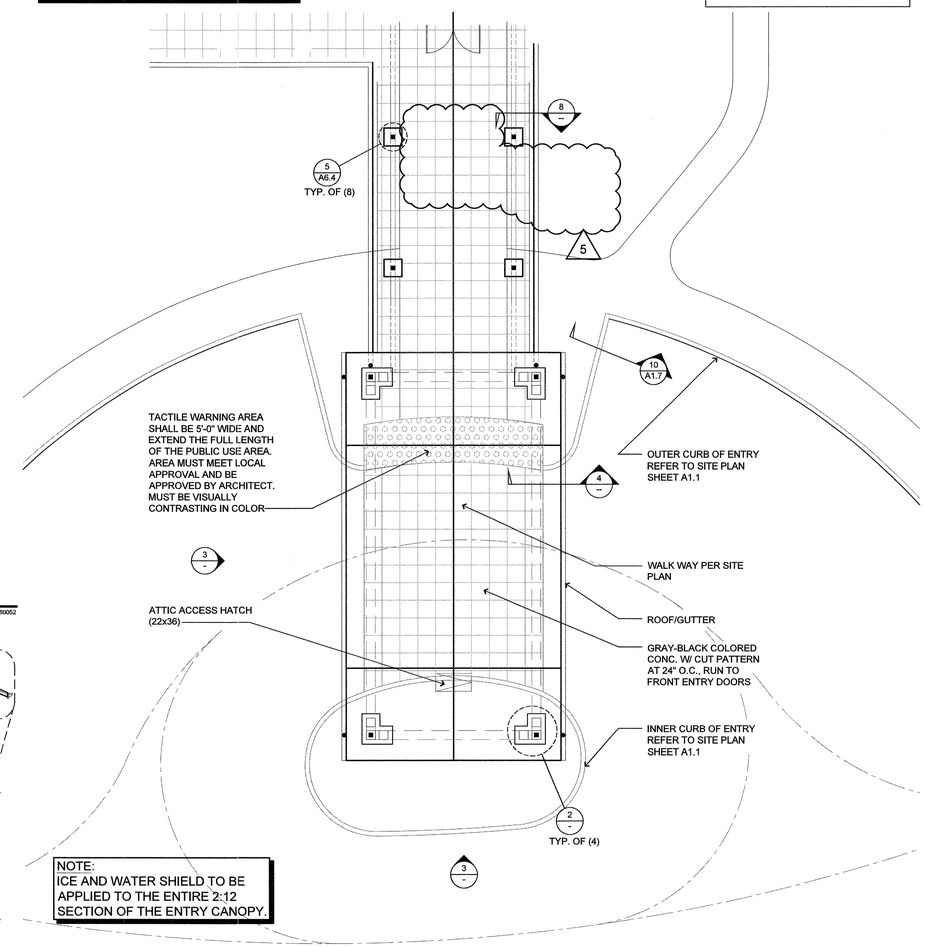

NOTE:
ICE AND WATER SHIELD TO BE APPLIED TO THE ENTIRE 2:12 SECTION OF THE ENTRY CANOPY.

1 LAYOUT
(COVERED ENTRY CANOPY)
SCALE: 1/8" = 1'-0"

REGISTERED ARCHITECT DAMIEL ROACH No. 3526 STATE OF MAINE

lenity architecture
3750 Kettle Court S.E. Salem, Oregon 97301
P 503 399 1090 F 503 399 0262 www.lenityarchitecture.com

COLSON AND COLSON GENERAL CONTRACTOR, INC.
2260 McGILCHRIST STREET SE. SUITE 200
SALEM, OREGON, 97302
PHONE (503) 586-7401

PORTLAND RETIREMENT RESIDENCE
802 OCEAN AVE. PORTLAND, MAINE 04103

ENTRY CANOPY DETAILS

©2015 Lenity Architecture

DATE
8/28/2015

REVISED DATE
1 9/22/2015
2 2/2/2016
5 7/18/2016

SHEET
A4.0

Date: 8/29/2016 11:11 AM Jobp: jobc8/24/2015 10:49 AM Jobf: jobf: file:p:\clearfront\re-portland\cards\a4.0 entry canopy details.dwg, A4.0