GENERAL NOTE:

1. CONNECTORS AND FASTENERS FOR PRESERVATIVE-TREATED AND FIRE-RETARDANT-TREATED WOOD SHALL BE OF HOT-DIPPED ZINC-COATED GALVANIZED STEEL, STAINLESS STEEL, SILICON BRONZE, OR COPPER INCLUDING BUT NOT LIMITED TO ANCHOR BOLTS, POWDER ACTUATED FASTENERS, NAILS, SCREWS, BOLTS, AND METAL FRAMING HARDWARE. (ZINC COATING WEIGHTS SHALL COMPLY WITH EITHER ASTM A 153M OR ASTM A 641, SUPPLEMENTARY REQUIREMENTS.)

2. PREENGINEERED METAL PLATE CONNECTED WOOD TRUSSES SHALL BE BRACED IN ACCORDANCE WITH TRUSS PLATE INSTITUTE'S "HANDLING, INSTALLING AND BRACING METAL PLATE CONNECTED WOOD TRUSSES, HIB-91".

3. PREENGINEERED TRUSS SHOP DRAWINGS SHALL BE AVAILABLE ON THE JOB SITE DURING THE TIMES OF INSPECTION AND SHALL BEAR CLEAR INDICATION THAT THEY HAVE BEEN REVIEWED AND APPROVED BY THE PROJECT STRUCTURAL ENGINEER-OF-RECORD * (OR ARCHITECT-OF-RECORD FOR PROJECTS WITHOUT A STRUCTURAL ENGINEER-OF-RECORD)

SHEARWALL MARK	SHT'G. TYPE & THICKNESS			SHT'G. NAIL INFO.			DBL. TOP ℄ CONN.			SHEARWALL TO CONC. CONN.	
	APA	WALL SD.	BOTH SIDES	NAIL SIZE	FIELD OC	EDGE OC	NO. REQ'D NTS	16d NAIL'G	A35 OR LTP4 CLIPS	ANCHOR BOLT (10") SIZE & SPACING	(plf) LOAD
B	7/16"	--	--	8d	6"	12"	--	5" o.c.	22" o.c.	1/2"Ø @ 36" 5/8"Ø @ 48"	210
C	7/16"	--	--	8d	4"	12"	--	3" o.c.	14" o.c.	1/2"Ø @ 24" 5/8"Ø @ 36"	320
D	7/16"	--	--	8d	3"	12"	--	2-1/2" o.c.	11" o.c.	1/2"Ø @ 16" 5/8"Ø @ 30"	415
E	7/16"	--	--	8d	2"	12"	1	2" o.c.	8" o.c.	1/2"Ø @ 12" 5/8"Ø @ 21"	535
F	7/16"	--	YES	8d	3"	12"	1	2" o.c.	5 1/2" o.c.	1/2"Ø @ 10" 5/8"Ø @ 15"	830

KEY NOTES
1. 3X STUDS AT PANELS EDGES.
2. 5/8" GYP. SHT'G TO BE SECURED W/ 6d COOLER NAILS DIRECTLY TO STUDS
3. NAILS ARE TO BE COMMON OR HOT DIPPED GALVANIZED IRON.

SHEAR PANEL NOTE:
* SHEAR VALUES ARE ADJUSTED FOR SPRUCE-PINE-FIR STUDS @ 16" O.C. U.O.N.
* ALL APA SHT'G SHEAR WALLS TO BE BACKED W/ 2" NOMINAL OR WIDER FRAMING
* WHEN APA RATED PANELS ARE INSTALLED TO BOTH SIDES OF WALL PANEL JOINTS OFFSET TO FALL ON DIFFERENT FRAMING MEMBERS
* NAILING NOT TO PENETRATE THE OUTER VENEER LAYER
* ALL EDGES ON APA RATED PANELS TO BE BLOCKED TO MAINTAIN STRENGTH

4 SHEARWALL SCHEDULE
(OUTBUILDINGS)
SCALE: N.T.S.
T:/06WD&PLS/115SHTHG/06115020

NOTE:
COORDINATE WITH STRUCTURAL FOR ADDITIONAL REQUIREMENTS.

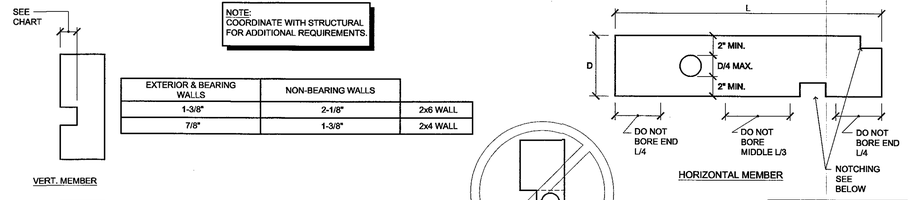

EXTERIOR & BEARING WALLS	NON-BEARING WALLS	
1-3/8"	2-1/8"	2x6 WALL
7/8"	1-3/8"	2x4 WALL

BEARING WALLS	NON-BEARING WALLS OR DBL. STUDS, PROVIDED NOT MORE THAN TWO CONCESSIVE DBL. STUDS	
2-1/8"	3-1/4"	2x6 WALL
1-3/8"	2"	2x4 WALL

HORIZONTAL JOISTS	
NOTCHES	NOT ALLOWED
BORED HOLES	25% DEPTH MAXIMUM AT MIDDLE OF JOIST OR BEAM

3 ALLOWABLE HOLES
(SOLID WOOD FRAMING MEMBERS ONLY)
SCALE: N.T.S. (1:4)
T:/06WD&PLS/110FRAMG/06110002

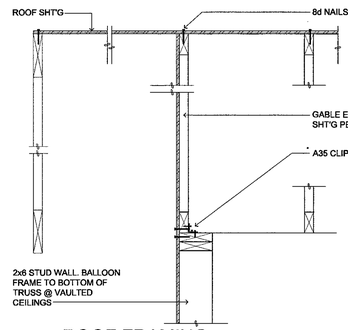

7 ROOF FRAMING
(GABLE END ROOF)
SCALE: 1" = 1'-0"
T:/06WD&PLS/110FRAMG/06110046

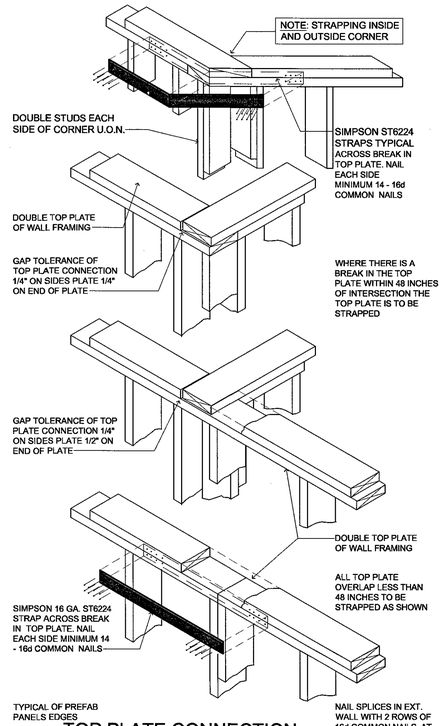

5 TOP PLATE CONNECTION
(PLATE CONTINUITY)
SCALE: N.T.S.
T:/06WD&PLS/110FRAMG/06110154

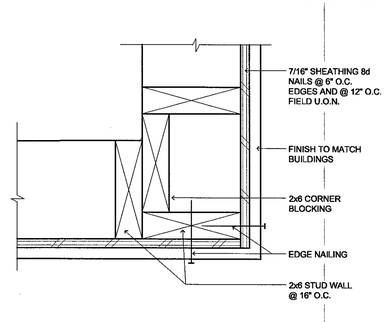

2 CORNER DETAIL
(UNINSULATED)
SCALE: 3" = 1'-0"
T:/105FECL/T530GARG/10530008

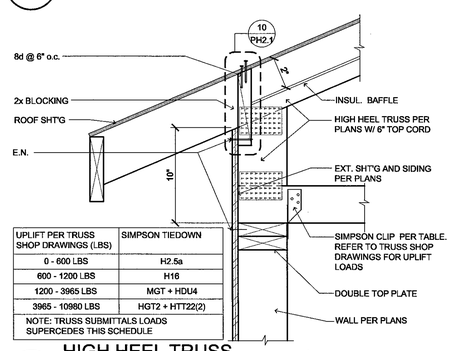

UPLIFT PER TRUSS SHOP DRAWINGS (LBS)	SIMPSON TIEDOWN
0 - 600 LBS	H2.5a
600 - 1200 LBS	H16
1200 - 3965 LBS	MGT + HDU4
3965 - 10960 LBS	HGT2 + HTT22(2)
NOTE: TRUSS SUBMITTALS LOADS SUPERCEDES THIS SCHEDULE	

6 HIGH HEEL TRUSS
SCALE: N.T.S. (1:8)
P:/HAWTHORN/ME-PORTLAND/PUMP HOUSE/DETAILS/10530204

1. REFER TO DETAIL 3 FOR ALLOWABLE HOLES IN MEMBERS.
2. FOR TOP PLATE CONTINUITY SEE DETAIL 5.
3. REFER TO DETAIL 4 FOR SHEARWALL SCHEDULE.
4. FOR NAILING SCHEDULE SEE DTL. 1/PH3.3.
5. REFER TO DTL 3/PH3.3 FOR NAILING OF MULTIPLE BEAM MEMBERS.

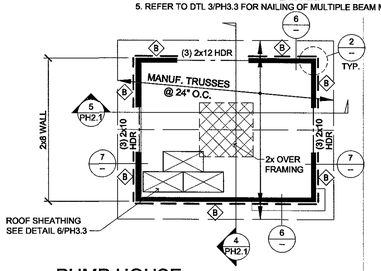

1 PUMP HOUSE
(FRAMING PLAN)
SCALE: 1/8" = 1'-0"
P:/HAWTHORN/ME-PORTLAND/PUMP HOUSE/DETAILS/10530203

©2016 Lenity Architecture

lenity architecture
3150 Kettle Court SE, Salem, Oregon 97301
P 503 399 1090 F 503 399 0365 w lenityarchitecture.com

COLSON AND COLSON GENERAL CONTRACTOR, INC.
2260 McGILCHRIST STREET SE, SUITE 200
SALEM, OREGON, 97302
PHONE (503) 586-7401

PORTLAND RETIREMENT RESIDENCE
802 OCEAN AVE. PORTLAND, MAINE 04103

PUMP HOUSE FRAMING PLAN AND DETAILS

DATE 5/27/2016
REVISED DATE

SHEET PH3.2

STATE OF MAINE Daniel Green No. 866 PROFESSIONAL ENGINEER
Date: 09/20/16

Reviewed for Code Compliance Inspections Division Approved as Noted