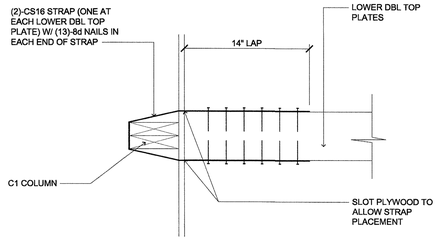

12 CONNECTION DETAIL
(LOWER WALL AND TALLER WALL STRAPS)
SCALE: N.T.S.
P:/HAWTHORN/FL-TALLAHASSEE/VAN GARAGE/VG 3. FRMG

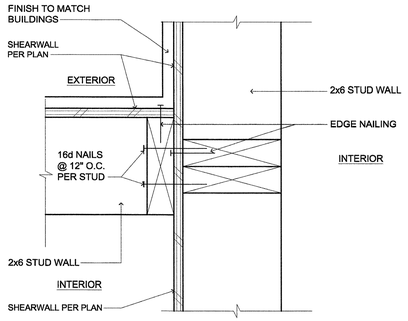

8 WALL INTERSECTION DETAIL
SCALE: 3" = 1'-0"
T:/10SPECLT/530GARG/10530009

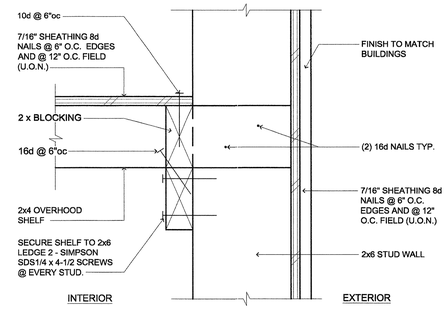

5 WALL DETAIL
(OVERHOOD SHELF)
SCALE: 3" = 1'-0"
T:/10SPECLT/530GARG/10530010

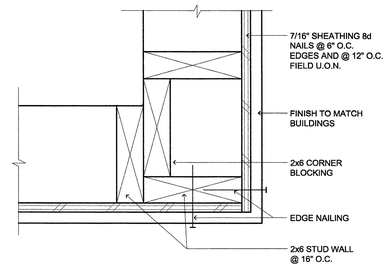

4 CORNER DETAIL
(UNINSULATED)
SCALE: 3" = 1'-0"
T:/10SPECLT/530GARG/10530008

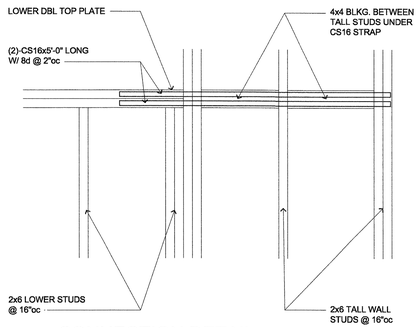

11 CONNECTION DETAIL
(LOWER WALL AND TALLER WALL STRAPS)
SCALE: N.T.S.
S:/HAWTHORN/OUT BUILDINGS/VAN GARAGE/VG 3. FRMG

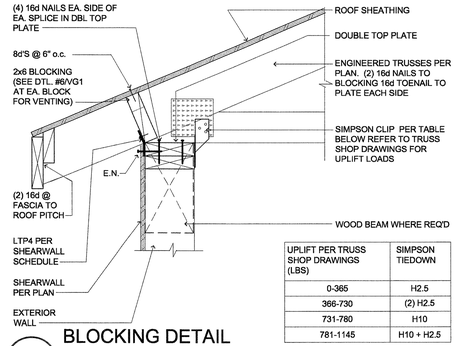

UPLIFT PER TRUSS SHOP DRAWINGS (LBS)	SIMPSON TIEDOWN
0-365	H2.5
366-730	(2) H2.5
731-780	H10
781-1145	H10 + H2.5

7 BLOCKING DETAIL
(ROOF AT EAVE / NOT VENTED)
SCALE: N.T.S.
T:/06WD&PLS/110FRAMG/06110239

GENERAL NOTE:
1. CONNECTORS AND FASTENERS FOR PRESERVATIVE-TREATED AND FIRE-RETARDANT-TREATED WOOD SHALL BE OF HOT-DIPPED ZINC-COATED GALVANIZED STEEL, STAINLESS STEEL, SILICON BRONZE, OR COPPER INCLUDING BUT NOT LIMITED TO ANCHOR BOLTS, POWDER ACTUATED FASTENERS, NAILS, SCREWS, BOLTS, AND METAL FRAMING HARDWARE. (ZINC COATING WEIGHTS SHALL COMPLY WITH EITHER ASTM A 153M OR ASTM A 641, SUPPLEMENTARY REQUIREMENTS.)

2. PREENGINEERED METAL PLATE CONNECTED WOOD TRUSSES SHALL BE BRACED IN ACCORDANCE WITH TRUSS PLATE INSTITUTE'S "HANDLING, INSTALLING AND BRACING METAL PLATE CONNECTED WOOD TRUSSES, HIB-91".

3. PREENGINEERED TRUSS SHOP DRAWINGS SHALL BE AVAILABLE ON THE JOB SITE DURING THE TIMES OF INSPECTION AND SHALL BEAR CLEAR INDICATION THAT THEY HAVE BEEN REVIEWED AND APPROVED BY THE PROJECT STRUCTURAL ENGINEER-OF-RECORD * (OR ARCHITECT-OF-RECORD FOR PROJECTS WITHOUT A STRUCTURAL ENGINEER-OF-RECORD)

SHRWALL MARK	SHT'G. TYPE & THICKNESS		SHT'G. NAIL INFO.			DBL. TOP & CONN.			SHRWALL TO CONC. CONN.	
	APA	BD. WALL	SIDES BOTH	TYP. NAIL @ FIELD OC.	EDGE OC.	HOLD DOWN KEY	16d NAIL'G	LPT4 CLIPS AND ABS	ANCHOR BOLT (1/2"Ø) SIZE & SPACING	(plf) LOAD
A	-	5/8" --	8d CLR.	7" 7"	2	6" o.c.	24" o.c.		1/2"Ø @ 48" or 5/8"Ø @ 48"	100
B	7/16"	-- --	8d	6" 12"	--	5" o.c.	22" o.c.		1/2"Ø @ 36" or 5/8"Ø @ 48"	210
C	7/16"	-- --	8d	4" 12"	--	3" o.c.	14" o.c.		1/2"Ø @ 24" or 5/8"Ø @ 36"	320
D	7/16"	-- --	8d	3" 12"	--	2-1/2" o.c.	11" o.c.		1/2"Ø @ 16" or 5/8"Ø @ 30"	415
E	7/16"	-- --	8d	2" 12"	1	2" o.c.	8" o.c.		1/2"Ø @ 12" or 5/8"Ø @ 21"	535
F	7/16"	-- YES	8d	3" 12"	1	2" o.c.	5 1/2" o.c.		1/2"Ø @ 10" or 5/8"Ø @ 15"	830

KEY NOTES
1. 3X STUDS AT PANELS EDGES.
2. 5/8" GYP. SHT'G TO BE SECURED W/ 6d COOLER NAILS DIRECTLY TO STUDS
3. NAILS ARE TO BE COMMON OR HOT DIPPED GALVANIZED IRON.

SHEAR PANEL NOTE:
* SHEAR VALUES ARE ADJUSTED FOR SPRUCE-PINE-FIR STUDS @ 16" O.C. U.O.N.
* ALL APA SHT'G SHEAR WALLS TO BE BACKED W/ 2" NOMINAL OR WIDER FRAMING
* WHEN APA RATED PANELS ARE INSTALLED TO BOTH SIDES OF WALL PANEL JOINTS OFFSET TO FALL ON DIFFERENT FRAMING MEMBERS
* NAILING NOT TO PENETRATE THE OUTER VENEER LAYER
* ALL EDGES ON APA RATED PANELS TO BE BLOCKED TO MAINTAIN STRENGTH

3 SHEARWALL SCHEDULE
(OUTBUILDINGS)
SCALE: N.T.S.
T:/06WD&PLS/115SHTHG/06115020

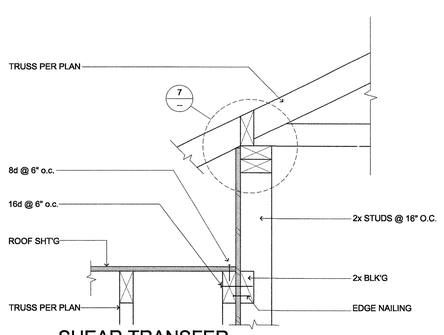

10 SHEAR TRANSFER
(@ POST)
SCALE: N.T.S.
T:/06WD&PLS/113FLFRMG/06113048

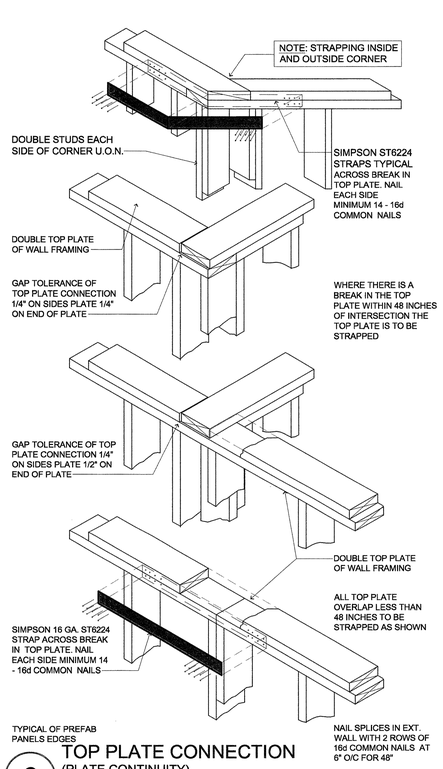

6 TOP PLATE CONNECTION
(PLATE CONTINUITY)
SCALE: N.T.S.
T:/06WD&PLS/110FRAMG/06110154

NOT USED

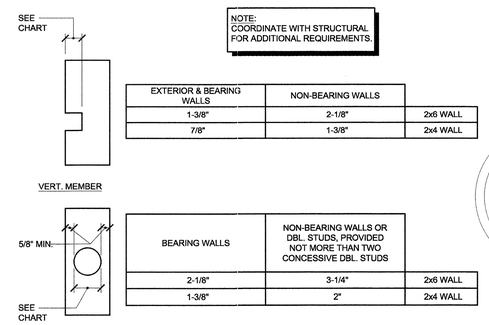

NOTE:
COORDINATE WITH STRUCTURAL FOR ADDITIONAL REQUIREMENTS.

EXTERIOR & BEARING WALLS	NON-BEARING WALLS	
1-3/8"	2-1/8"	2x6 WALL
7/8"	1-3/8"	2x4 WALL

BEARING WALLS	NON-BEARING WALLS OR DBL. STUDS, PROVIDED NOT MORE THAN TWO CONCESSIVE DBL. STUDS	
2-1/8"	3-1/4"	2x6 WALL
1-3/8"	2"	2x4 WALL

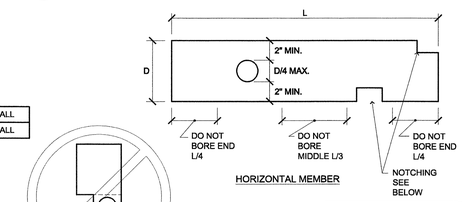

BORED HOLES SHALL NOT BE LOCATED AT THE SAME SECTION OF STUD AS CUT OR NOTCH.

HORIZONTAL JOISTS	
NOTCHES	NOT ALLOWED
BORED HOLES	25% DEPTH MAXIMUM AT MIDDLE OF JOIST OR BEAM

2 ALLOWABLE HOLES
(SOLID WOOD FRAMING MEMBERS ONLY)
SCALE: N.T.S. (1:4)
T:/06WD&PLS/110FRAMG/06110002

SEE DETAIL 2 ON VG-3 FOR ALLOWABLE BORING / NOTCHING OF MEMBERS. SEE DETAIL 6 FOR PLATE CONTINUITY. SEE DETAIL 1 AND 5 ON VG-4 FOR NAILING AND STAPLES SCHEDULE, DETAIL 2 AND 3 VG-4 FOR BUILT-UP-COLUMN AND BEAM DETAIL, DETAIL 4 VG-3 FOR CORNER DETAIL.

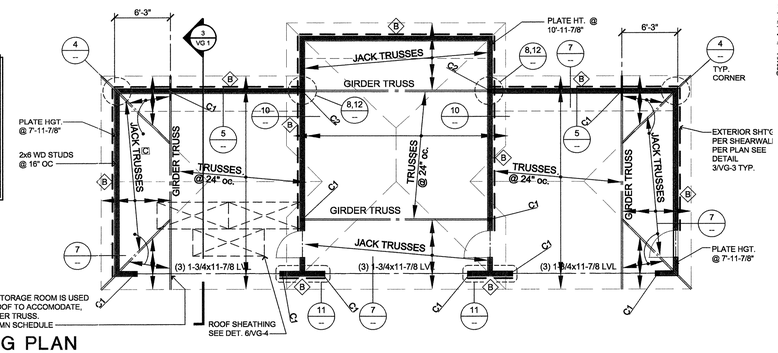

NOTE:
-WHEN ALTERNATE STORAGE ROOM IS USED STRETCH THE HIP ROOF TO ACCOMODATE, AND MOVE THE GIRDER TRUSS.
-SEE VG 2 FOR COLUMN SCHEDULE

1 FRAMING PLAN
(GARAGES W/REAR PUSHOUT VAN ALLOWANCE)
SCALE: 1/8" = 1'-0"
T:/10SPECLT/530GARG/10530002

©2015 Lently Architecture

lently architecture
3350 Kettle Court SE, Salem, Oregon 97301
p 503 399 1090 f 503 399 0555 w lentlyarchitecture.com

COLSON AND COLSON GENERAL CONTRACTOR, INC.
2280 MCGILCHRIST STREET SE, SUITE 200
SALEM, OREGON, 97302
PHONE (503) 586-7401

PORTLAND RETIREMENT RESIDENCE
802 OCEAN AVE. PORTLAND, MAINE 04103

VAN GARAGE FRAMING PLAN AND DETAILS

DATE 8/28/2015
REVISED DATE
1 9/22/2015

SHEET
VG3

Reviewed for Code Compliance
Inspections Division
Approved with Conditions
Date: 04/11/16
CITY OF PORTLAND, MAINE
PROJECT NO. 16-0000

save: 1/14/2016 4:27 PM andrew pat:2/2/2016 1:38 PM jasond file:p:\hawthorne-portland\van garage\vg 3. frmg.dwg VG3