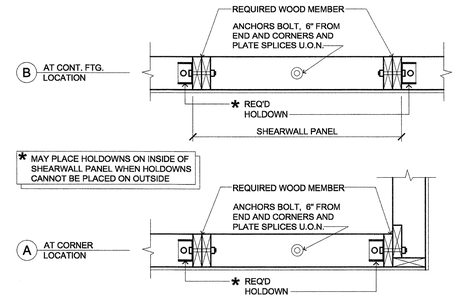

8 TYPICAL HOLDOWN PLACEMENT

SCALE: 1" = 1'-0"

T:/03CONC/300CAST/03300057

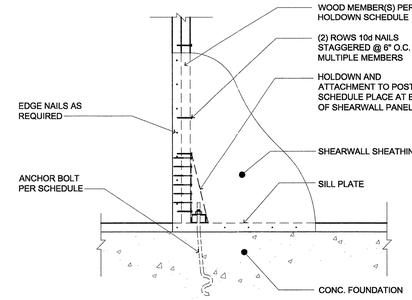

7 BUILT-UP COLUMN (@HOLDOWN LOCATION)

SCALE: 1" = 1'-0"

T:/03CONC/300CAST/03300024

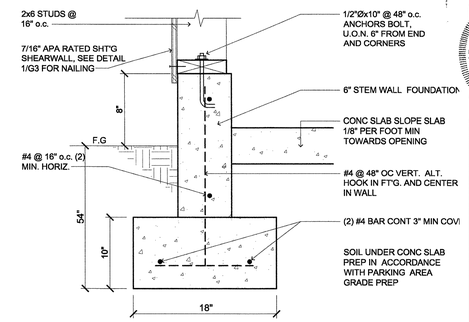

4 FOOTING DETAIL (WALL FOOTING)

SCALE: 1 1/2" = 1'-0"

T:/03CONC/300CAST/03300110-GARAGE

HOLDOWN SCHEDULE									
MARK	HOLDOWN	ANCHOR BOLT	ANCHOR SIZE	EMBED. LENGTH	WOOD MEMBER	ANCHORAGE TO WOOD	DETAILS	REMARKS	ALLOW LOAD (lbs)
HDU2	HDU2-SDS2.5	SSTB16	5/8"Ø	12-5/8"	(2) 2x STUDS	(6) SDS 1/4"x 2-1/2" SCREWS	PER DETAILS 6, 7 & 8/G2	-	3075

NOTE: ON ALL HD HOLDOWNS, PLACE ONE (1) EXTRA VERTICAL #4 BAR FROM FOOTING INTO STEMWALL NEXT TO HD.

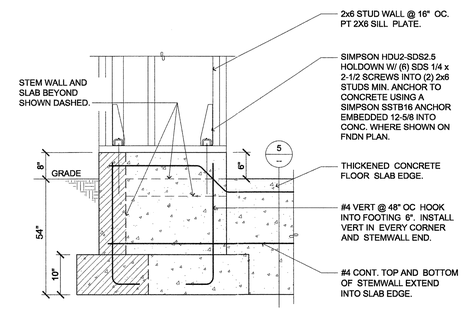

6 FOUNDATION DETAIL (GARAGE DOOR OPENING)

SCALE: 3/4" = 1'=0"

T:/03CONC/300CAST/03300045

NOTE:
CONTROL JOINTS SHALL BE OFFSET FROM CENTERLINE OF COLUMNS AND WALLS A MIN. OF 12"

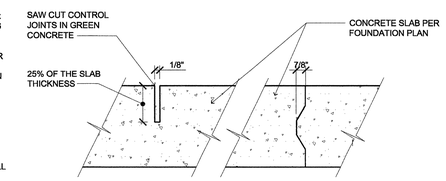

CONTROL JOINT
INSTALL EVERY 600 sf MAX

CONSTRUCTION JOINT
INSTALL EVERY 20000 sf MAX

ALL ATTEMPTS SHOULD BE MADE TO ACHIEVE A SQUARE GRID OF CONTROL AND CONSTRUCTION (COLD) JOINTS

3 SLAB ON GRADE (CONTROL/CONSTRUCTION JOINTS)

SCALE: NOT TO SCALE

T:/03CONC/305SLAB/03305002

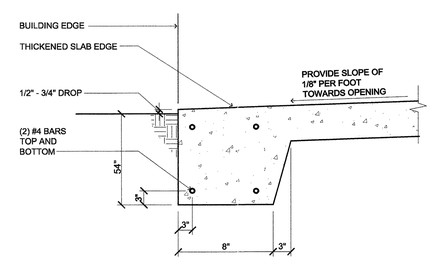

5 STEEL PLACEMENT (TYPICAL SLAB EDGE)

SCALE: 1" = 1'-0"

T:/03CONC/300CAST/03300048

NOTE:
RADON VENTING PER SOILS REPORT PG.7 AND PG.8

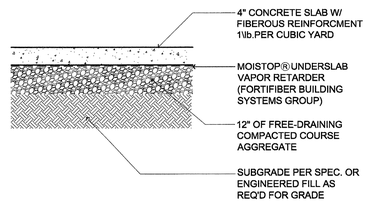

2 SLAB ON GRADE (CONCRETE SLAB DETAIL)

SCALE: 3/4" = 1'-0"

T:/03CONC/305SLAB/03305001

COLUMN SCHEDULE			
COL	MATERIAL	SIZE	BASEPLATE
C1	SPF #1/#2 OR BETTER DFL #2	(2) 2x6 4x6	

COLUMN PAD SCHEDULE		
PADS	WIDTH x LENGTH x THICKNESS	REINFORCEMENT
P-1	24" x 24" x 12"	(4) #4 BARS E.W.

FOUNDATION NOTES

1. BOTTOM PLATE ANCHORS: EXTERIOR SHEARWALL - REFER TO SHEARWALL SCHEDULE EXTERIOR NON-SHEARWALL - 1/2"Øx10" ANCHOR BOLTS @ 48" o.c. AND 6" FROM ENDS AND PLATE SPLICES. INTERIOR SHEARWALL- REFER TO SHEARWALL SCHEDULE INTERIOR NON-SHEARWALL - "HILTI" DS72S36 @ 48"oc AND 6" FROM ENDS.
2. 28 DAY CONCRETE STRENGTH =3,000 psi MIN.
3. SOIL BEARING CAPACITY PER SOILS REPORT
   SPREAD FOOTINGS = 4,000 psf.
   SQUARE FOOTINGS = 4,000 psf.
4. DIMENSIONS SHOWN ARE: EXTERIOR WALLS = OUTSIDE EDGE OF STEM WALL
   INTERIOR WALLS = CENTER OF THICKENED SLAB FREE STANDING COLUMNS = CENTER OF COLUMN
5. FINISHED FLOOR ELEVATION PER CIVIL GRADING PLANS
6. MINIMUM FOUNDATION DEPTH 54" BELOW FINISH GRADE.
7. VERIFY ELEV. PIT REQ'TS. W/ MANUF. (DIM. SHOWN TO INSIDE FACE.)
8. FINISH GRADE (F.G.) TO BE 8" BELOW FINISH FLOOR (F.F.) ELEVATION.

EXTRACT FROM SOILS REPORT PREPARED BY:
S. W. COLE ENGINEERING, INC.
286 PORTLAND ROAD
GRAY, MAINE 04039
PHONE: 207-657-2866
PROJECT #14-1188S
DATE: JANUARY 16, 2015

7 COLUMN AND PAD SCHEDULE

SCALE: N.T.S.

S/OUT/BLDGS/VAN GARAGE/VG 2 FNDN

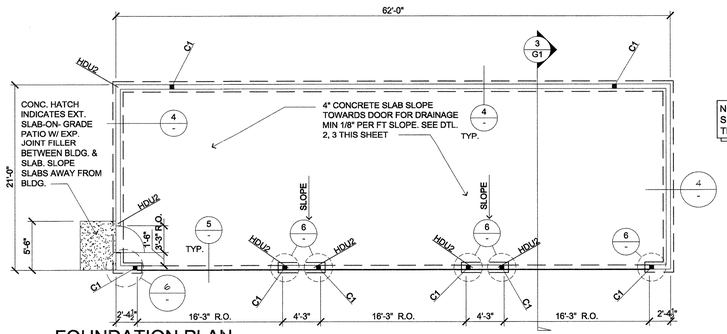

NOTE:
SEE HOLDOWN SCHEDULE THE SHEET.

1 FOUNDATION PLAN (GARAGE)

SCALE: 1/8" = 1'-0"

T:/10SPECLT/530GARG/10530011

©2015 lenity Architecture

Reviewed for Code Compliance
Inspections Division
Approved with Conditions
Date: 04/11/16
CITY OF PORTLAND, MAINE
BUILDING & INSPECTIONS PROGRAM
No. 2

lenity architecture
3150 Kettle Court SE, Salem, Oregon 97301
P 503 399 1090 F 503 399 0565 www.lenityarchitecture.com

COLSON AND COLSON GENERAL CONTRACTOR, INC.
2280 McGILCHRIST STREET SE, SUITE 200
SALEM, OREGON, 97302
PHONE (503) 586-7401

PORTLAND RETIREMENT RESIDENCE
802 OCEAN AVE. PORTLAND, MAINE 04103

GARAGE FOUNDATION PLAN AND DETAILS

DATE
8/28/2015

REVISED DATE
1 9/22/2015

SHEET
G2

save:1/14/2016 4:27 PM jacklew plot:2/2/2015 1:34 PM jacool file:p:\lawe\hum\ne-portland\garage 2fg 2 fnds.dwg G2