NOTE:
WRAP ENTIRE EXTERIOR OF BUILDING WITH BLDG PAPER (BY FORTIFIBER BUILDING SYSTEMS) ALL JOINTS TO BE TAPED WITH FORTIFIBER SHEATHING TAPE. SYSTEM MUST BE INSTALLED IN ACCORDANCE WITH MANUF. INSTALLATION INSTRUCTIONS TO PROVIDE 10 YR. WARRANTY TO GENERAL CONTRACTOR

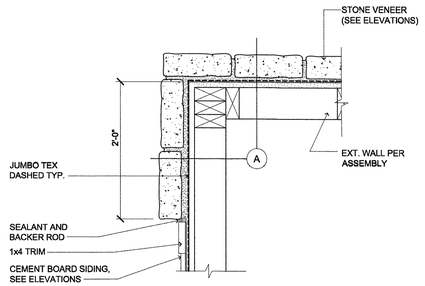

13 STONE VENEER
(STONE AT TYPICAL OUTSIDE CORNER)
SCALE: 1-1/2" = 1'-0"
T:/10SPECLT/530GARG/10530055

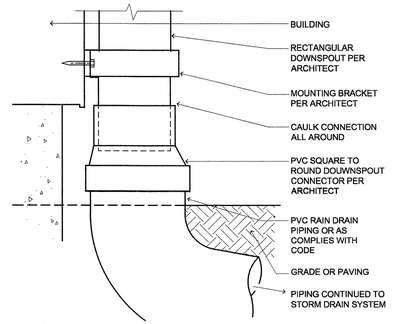

9 INSTALLATION DETAIL
(DOWNSPOUT CONNECTION)
SCALE: N.T.S.
T:/07TMPROT/600FLSHG/07600015

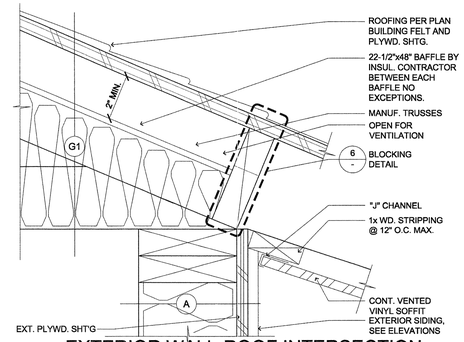

5 EXTERIOR WALL-ROOF INTERSECTION
(TRUSSES BEARING ON WALL TOP PLATE)
SCALE: 3" = 1'-0"
T:/06WD&PLS/111RFFRM/06111001

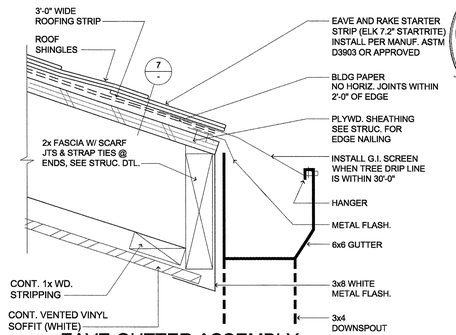

4 EAVE GUTTER ASSEMBLY
(ROOF WITH COMPOSITION SHINGLES)
SCALE: 3" = 1'-0"
T:/07TMPROT/600FLSHG/07600569

NOTE:
SEE BLDG PAPER
NOTE THIS SHEET

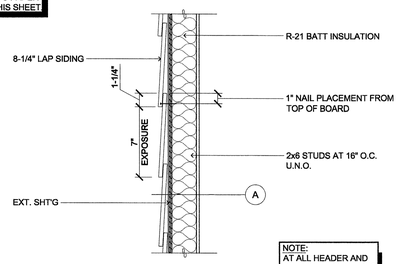

NOTE:
AT ALL HEADER AND BEAM INTERSECTIONS, MAINTAIN CONSISTENT PLAN ANGLE. SHIM AS REQ'D.

15 LAP SIDING
(SPACING DETAIL)
SCALE: 1-1/2"=1'-0"
T:/09FINISH/980WOOD/09980015

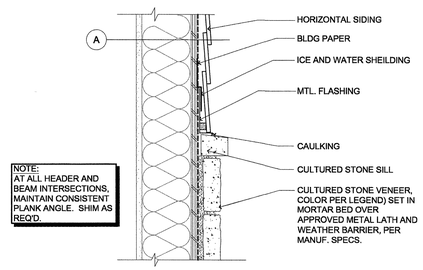

NOTE:
AT ALL HEADER AND BEAM INTERSECTIONS, MAINTAIN CONSISTENT PLANK ANGLE. SHIM AS REQ'D.

12 EXTERIOR WALL DETAIL
(STONE / CEM. BRD. SIDING)
SCALE: 1-1/2" = 1'-0"
T:/04MASNRY/473STONEVEN/04730010

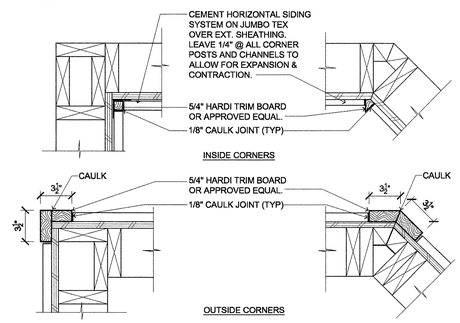

8 EXTERIOR WALL CORNERS
(TYP. ASSEMBLIES - CEMENT SIDING)
SCALE: 1-1/2" = 1'-0"
T:/10SPECLT/530GARG/10530058

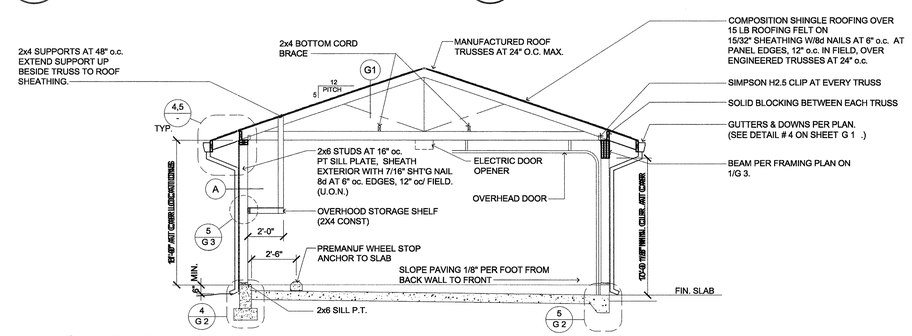

3 BUILDING SECTION
(GARAGE/STORAGE)
SCALE: 1/4" 1'-0"
T:/10SPECLT/530GARG/10530016

NOTE:
SEE BLDG PAPER
NOTE THIS SHEET.

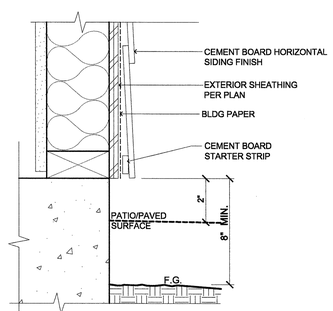

14 EXTERIOR WALL DETAIL
(SIDING AT PORCH, PATIO, GRADE)
SCALE: 3" = 1'-0"
T:/09FINISH/980WOOD/09980091

NOTE:
SEE JUMBO TEX
NOTE THIS SHEET.

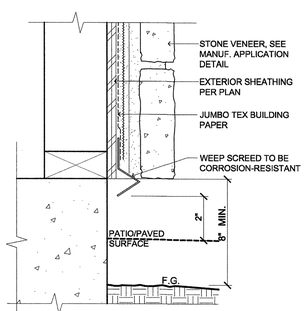

11 EXTERIOR WALL DETAIL
(WEEP SCREED)
SCALE: 3" = 1'-0"
T:/10SPECLT/530GARG/10530057

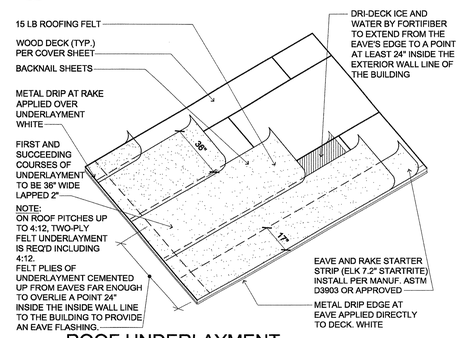

7 ROOF UNDERLAYMENT
(ASSEMBLY DETAIL)
SCALE: N.T.S.
T:/07TMPROT/600MMBRF/07600002

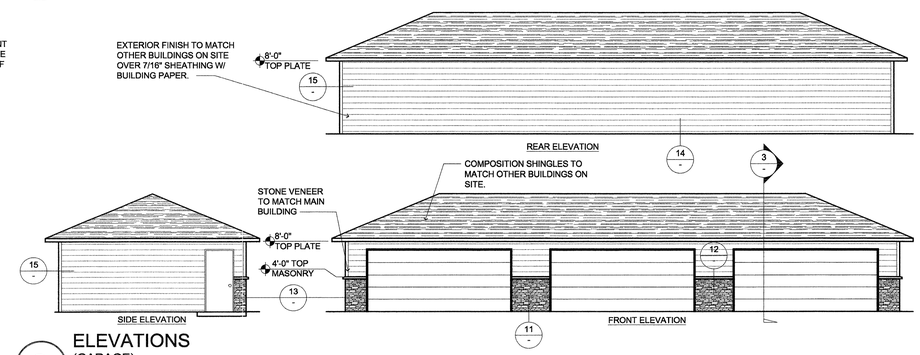

2 ELEVATIONS
(GARAGE)
SCALE: 1/8" = 1'-0"
P:/HAWTHORN/ME-PORTLAND/DETAILS/OUT BUILDINGS/G-10530013

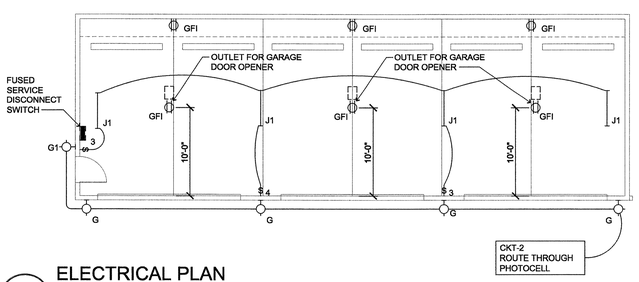

10 ELECTRICAL PLAN
(GARAGE)
SCALE: 1/8" = 1'-0"
T:/10SPECLT/530GARG/10530042

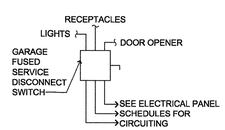

NOTE:
POWER REQUIREMENTS FOR GARAGE:
ELECTRICIAN TO PROVIDE 3 CIRCUITS
4 WIRES TO EACH.

CKT-1 - DOOR OPENER
CKT-2 - LIGHTS
CKT-3 - RECEPT.

FOR VENTILATION:
2" DIA. HOLE = 3.14 SQ. IN.
(2) HOLES PER LF = 6.28 SQ. IN. PER LF

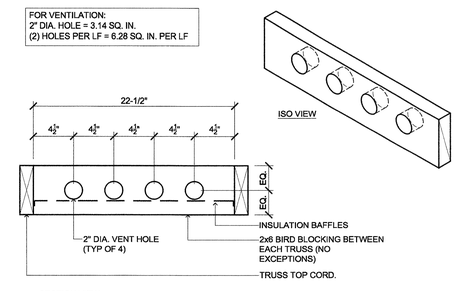

6 EXTERIOR EAVE BLOCKING
(TRUSSES BEARING ON WALL TOP PLATE)
SCALE: 1-1/2" = 1'-0"
T:/06WD&PLS/111RFFRM/06111087

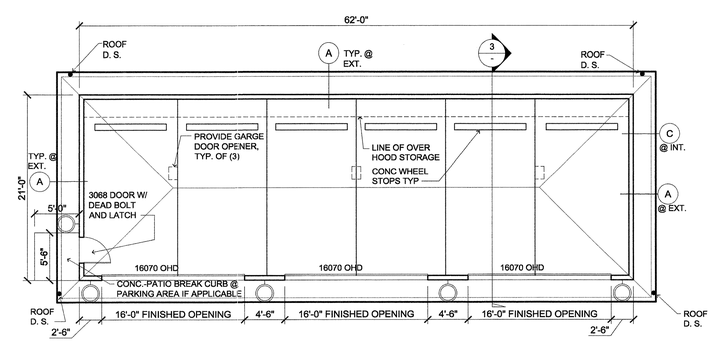

REFER TO DETAIL 3/G3 FOR SHEARWALL LOCATIONS.

1 PLAN
(GARAGE)
SCALE: 1/8" = 1'-0"
T:/10SPECLT/530GARG/10530015

Reviewed for Code Compliance
Inspections Division
Approved with Conditions
Date: 04/11/16

lenity architecture
3350 Vista Court SE, Salem, Oregon 97301
p 503 399 1090 f 503 399 0665 w lenityarchitecture.com

COLSON AND COLSON GENERAL CONTRACTOR, INC.
2280 MCGILCHRIST STREET SE, SUITE 200
SALEM, OREGON, 97302
PHONE (503) 586-7401

PORTLAND RETIREMENT RESIDENCE
802 OCEAN AVE. PORTLAND, MAINE 04103

GARAGE PLAN AND DETAILS

DATE 8/28/2015
REVISED DATE
1 9/22/2015

SHEET
G1

©2015 Lenity Architecture

save:1/25/2016 1:58 PM jasond pltd:2/2/2016 1:20 PM jasond file:p:\hawthorn\me-portland\garage\ 1\g 1 plan.dwg G1