DETAIL 7 NOT USED

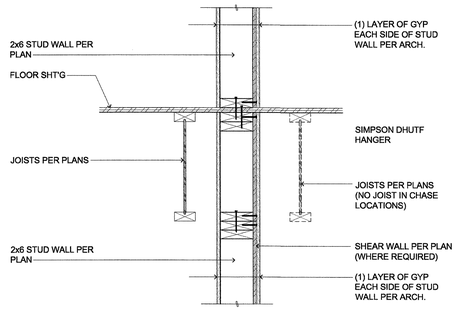

16 1 HOUR SEPARATION (NON-LOAD BEARING PARALLEL TO WALL)

SCALE: 1" = 1'-0" T:/06WD&PLS/110FRAMG/06110244

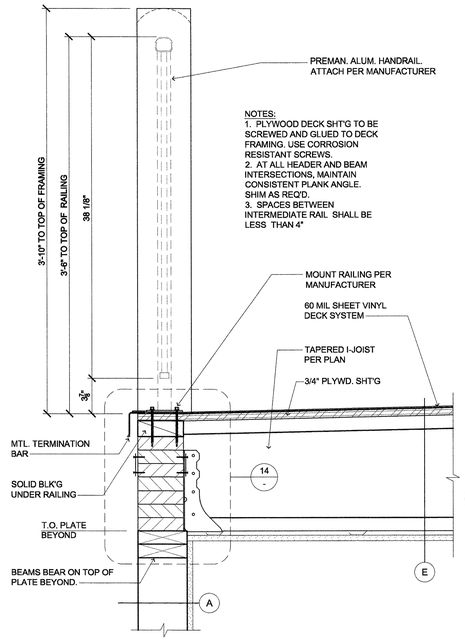

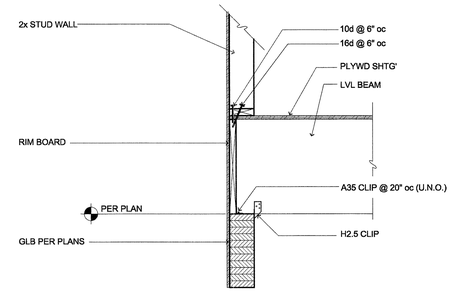

9 CONNECTION DETAIL

SCALE: 3/4" = 1'-0" T:/06WD&PLS/113FLFRM/06113027

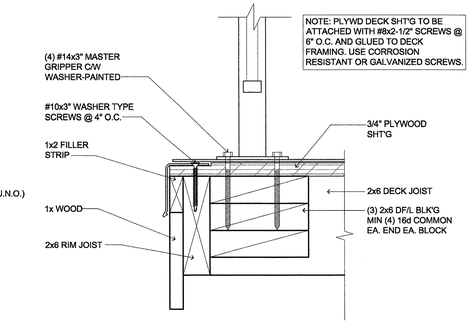

4 DECK FRAMING (DECK EGDE)

SCALE: 3" = 1'-0" T:/06WD&PLS/125WDECK/06125013

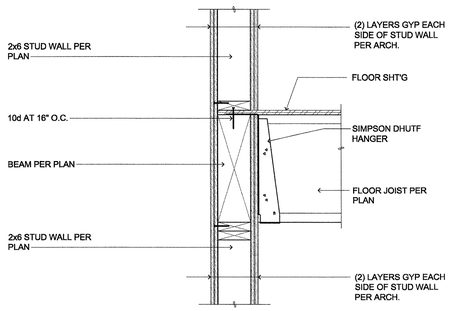

19 2 HOUR SEPARATION (LOAD BEARING)

SCALE: 1" = 1'-0" Z:/HAWTHORN/NC-CARY/DETAILS/06110243X

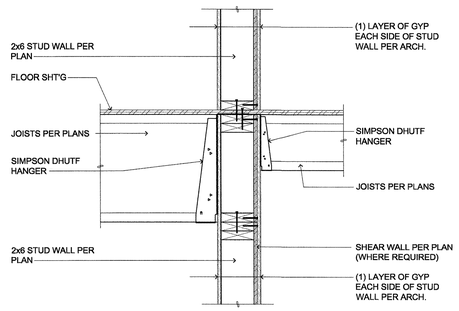

15 1 HOUR SEPARATION (LOAD BEARING PERP. TO JOIST)

SCALE: 1" = 1'-0" T:/06WD&PLS/110FRAMG/06110243

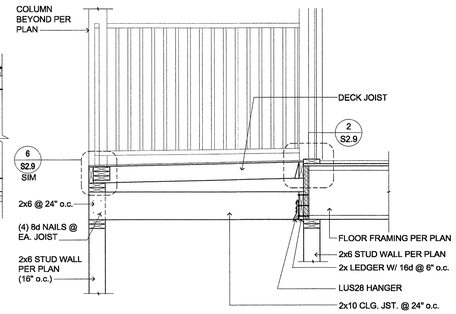

8 DECK FRAMING (ABOVE HVAC/ELEV. EQ. RM.)

SCALE: 1/2" = 1'-0" T:/06WD&PLS/110FRAMG/06110025

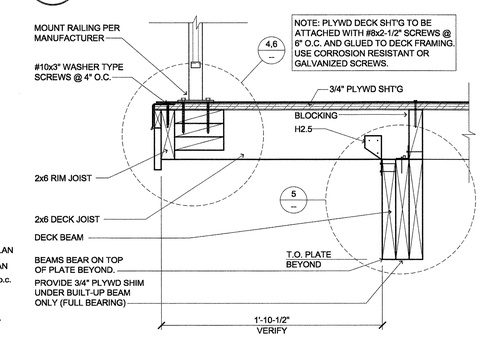

3 DECK FRAMING (DECK EDGE)

SCALE: 1 1/2" = 1'-0" T:/06WD&PLS/125WDECK/06125012

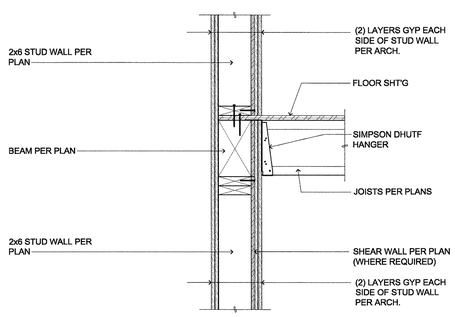

18 2 HOUR SEPARATION (LOAD BEARING - AT MIDLANDING)

SCALE: 1" = 1'-0" T:/06WD&PLS/110FRAMG/06110242

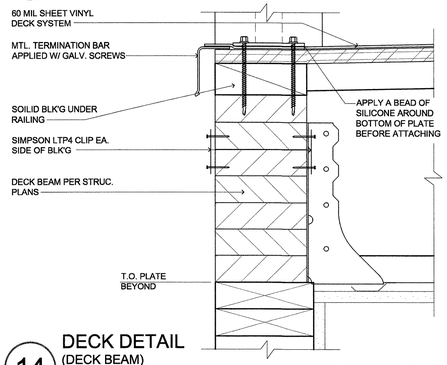

14 DECK DETAIL (DECK BEAM)

SCALE: 3" = 1'-0" T:/06WD&PLS/125WDECK/06125164

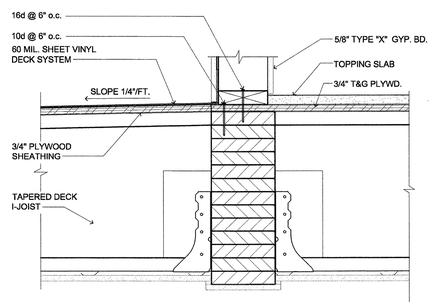

11 DECK-WALL INTERSECTION (SOFFIT ON UNDERSIDE OF DECK)

SCALE: 1 1/2" = 1'-0" T:/06WD&PLS/125WDECK/06125163

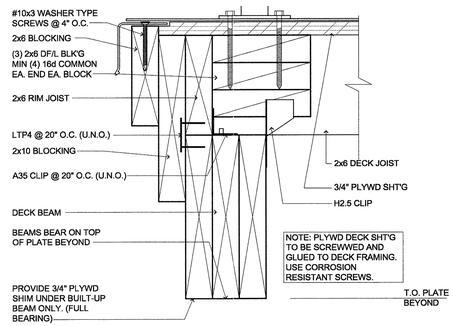

6 DECK FRAMING (DECK BEAM)

SCALE: 3" = 1'-0" T:/06WD&PLS/125WDECK/06125033

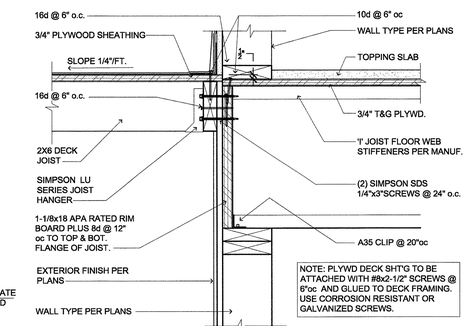

2 DECK FRAMING (DECK-WALL INTERSECTION)

SCALE: 1 1/2" = 1'-0" T:/06WD&PLS/125WDECK/06125011

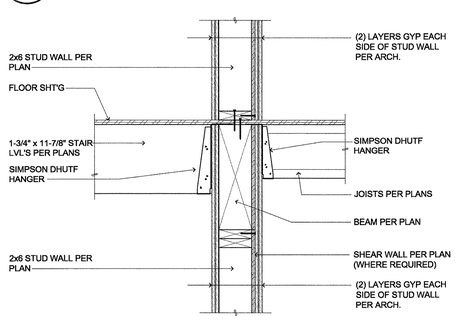

17 2 HOUR SEPARATION (LOAD BEARING PERP. TO JOIST)

SCALE: 1" = 1'-0" T:/06WD&PLS/110FRAMG/06110241

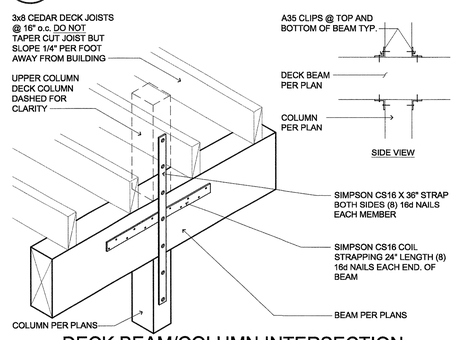

13 DECK BEAM/COLUMN INTERSECTION (TYPICAL OF WING END UNITS)

SCALE: N.T.S. T:/06WD&PLS/125WDECK/06125057

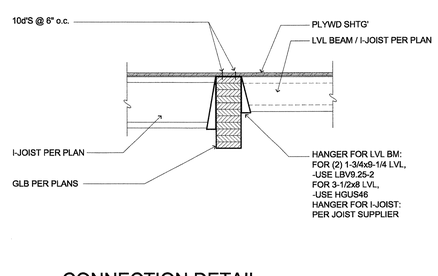

10 CONNECTION DETAIL (JOIST TO BEAM)

SCALE: 3/4" = 1'-0" T:/06WD&PLS/113FLFRM/06113028

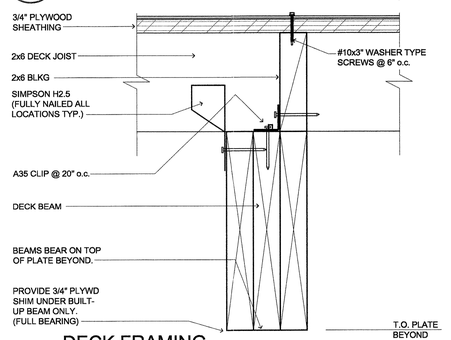

5 DECK FRAMING (DECK BEAM)

SCALE: 3" = 1'-0" T:/06WD&PLS/125WDECK/06125014

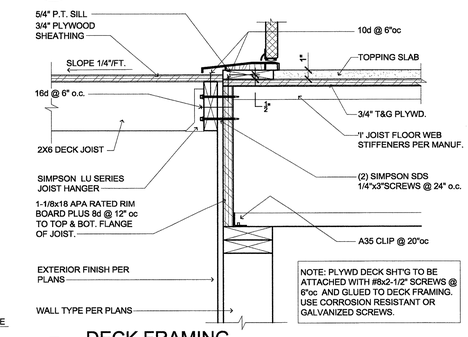

1 DECK FRAMING (DECK AT THRESHOLD)

SCALE: 1 1/2" = 1'-0" T:/06WD&PLS/125WDECK/06125010

STATE OF MAINE Daniel Green No. 8661 PROFESSIONAL ENGINEER 1/15/15

lenity architecture
3350 Kettle Court SE, Salem, Oregon 97301
p 503 399 1090 f 503 399 0565 w lenityarchitecture.com

COLSON AND COLSON GENERAL CONTRACTOR, INC.
2260 McGILCHRIST STREET SE, SUITE 200
SALEM, OREGON, 97302
PHONE (503) 586-7401

PORTLAND RETIREMENT RESIDENCE
802 OCEAN AVE. PORTLAND, MAINE 04103

DECK AND FRAMING DETAILS

©2015 Lenity Architecture

DATE 8/28/2015

REVISED DATE
1 9/22/2015

SHEET S2.9

saved 1/14/2016 4:26 PM andrew pdt /1/20/2016 11:02 AM jasond file:p:\hawthorne-portlandcolson\cd\2.9-deck framing details.dwg DQ 9