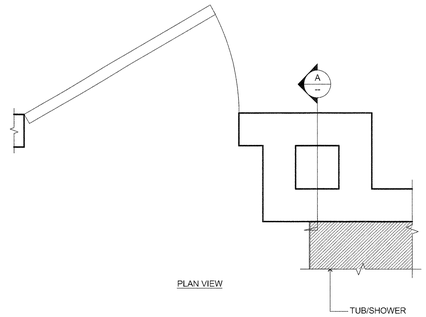

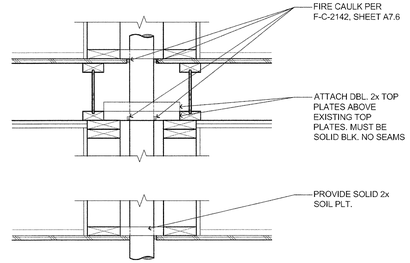

8 FIRE STOPPING BEHIND SHOWER
(SECTION)
SCALE: 1" = 1'-0"
T:/07TMPROT/270FRSTP/07270026

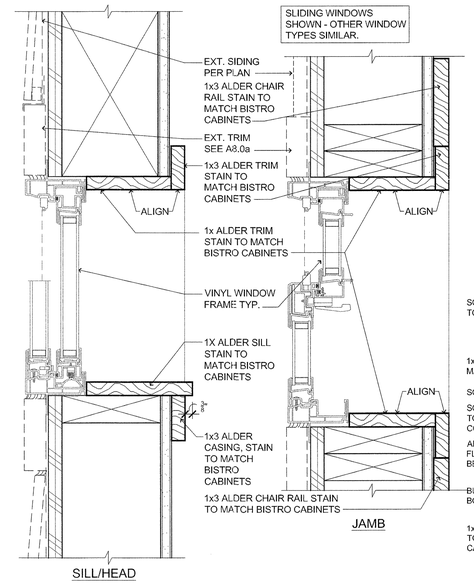

5 TRIM AT WINDOW
(SILL / HEAD SECTION, JAMB PLAN)
SCALE: 3" = 1'-0"
T:/08DR&WDW/630PLWIN/08630522

DETAILS 2 AND 4 NOT USED

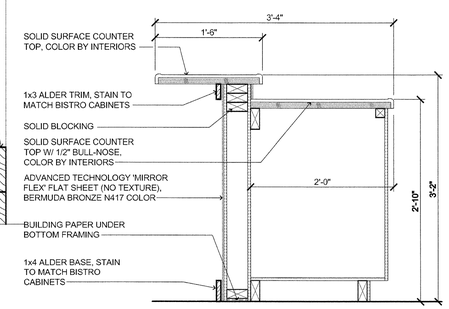

3 COUNTER DETAIL
(BISTRO)
SCALE: 1" = 1'-0"
T:/12FURNSH/300CASWK/12300608

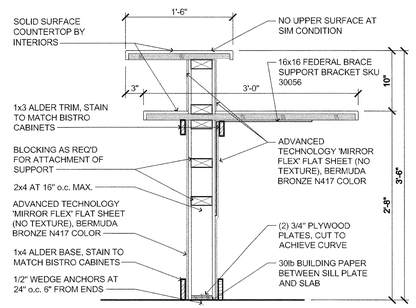

7 COUNTER DETAIL
(ACTIVITY)
SCALE: 1" = 1'-0"
T:/12FURNSH/300CASWK/12300609

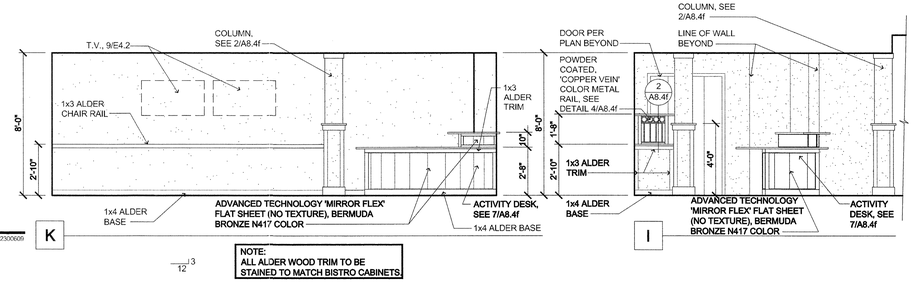

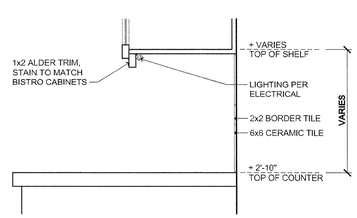

6 CABINET LIGHTING
(AT BISTRO)
SCALE: 1-1/2" = 1'-0"
T:/12FURNSH/300CASWK/12300610

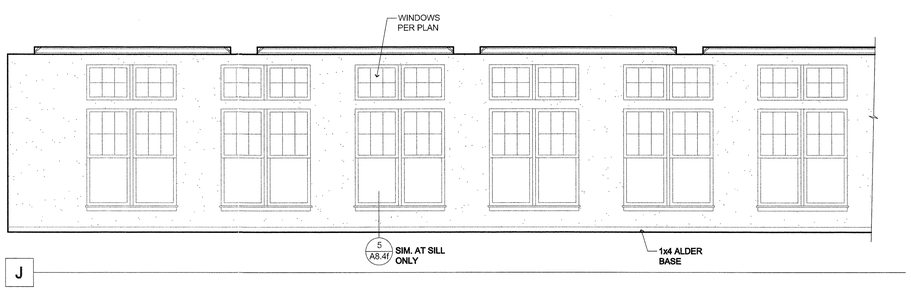

1 INTERIOR ELEVATIONS
(BISTRO / ACTIVITY)
SCALE: 1/4" = 1'-0"
T:/12FURNSH/300CASWK/12300600TEMP

REGISTERED ARCHITECT DANIEL ROACH No. 3528 STATE OF MAINE

lenity architecture
3350 Kettle Court SE, Salem, Oregon 97301
P 503 399 1090 F 503 399 0665 w lenityarchitecture.com

COLSON AND COLSON GENERAL CONTRACTOR, INC.
2260 McGILCHRIST STREET SE, SUITE 200
SALEM, OREGON, 97302
PHONE (503) 586-7401

PORTLAND RETIREMENT RESIDENCE
802 OCEAN AVE. PORTLAND, MAINE 04103

INTERIOR ELEVATIONS AND DETAILS

©2015 Lenity Architecture

DATE 8/28/2015
REVISED DATE
1 9/22/2015

SHEET
A8.4f