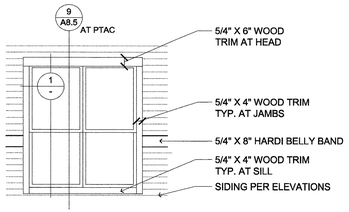

8 WINDOW TRIM
TYP. TRIM WITH NO MULLION AT CEM. BD. / CEM. BD.
SCALE: 1/4" = 1'-0"
P:/HAWTHORN/ME-PORTLAND/DETAILS/08630532

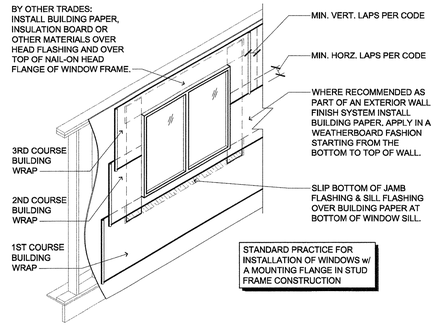

4D WEATHER BARRIER
WINDOW INSTALL DETAIL (4 of 4) (AAMA 2400-02)
PUBLISH DATE: 2002
SCALE: 1/4" = 1'-0"
T:/07TMPROT/100WTRPF/07100009

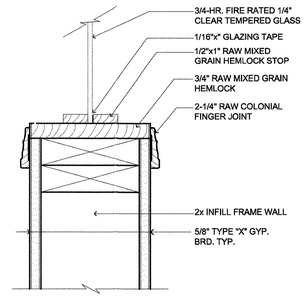

3 INTERIOR WOOD RE-LITE
(SILL, HEAD, AND JAMB SIM.)
SCALE: 3" = 1'-0"
T:/08DR&WDW/630PLWIN/08630015

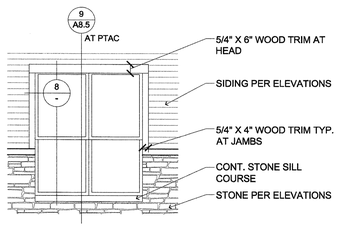

7 WINDOW TRIM
TYP. TRIM WITH NO MULLION AT STONE
SCALE: 1/4" = 1'-0"
T:/08DR&WDW/630PLWIN/08630525

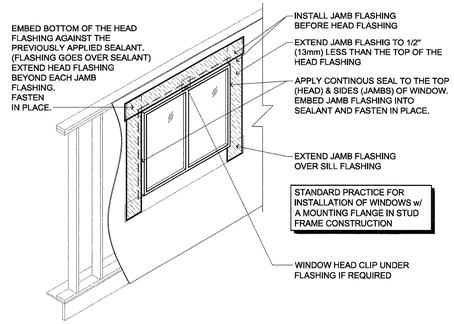

4C JAMB AND HEAD FLASHING
WINDOW INSTALL DETAIL (3 of 4) (AAMA 2400-10)
PUBLISH DATE: SEPT. 2010
SCALE: 1/4" = 1'-0"
T:/07TMPROT/100WTRPF/07100008

NOT USED

2

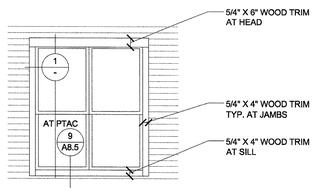

6 WINDOW TRIM
TYP. TRIM NO MULLION
SCALE: 1/4" = 1'-0"
T:/08DR&WDW/630PLWIN/08630041

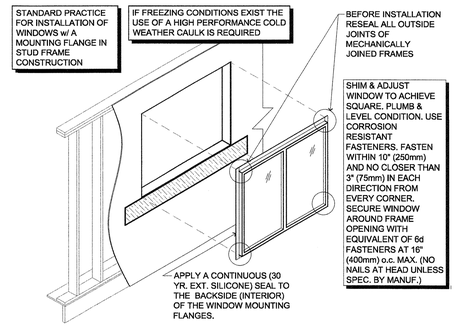

4B WINDOW INSTALLATION
WINDOW INSTALL DETAIL (2 of 4) (AAMA 2400-10)
PUBLISH DATE: SEPT. 2010
SCALE: 1/4" = 1'-0"
T:/07TMPROT/100WTRPF/07100007

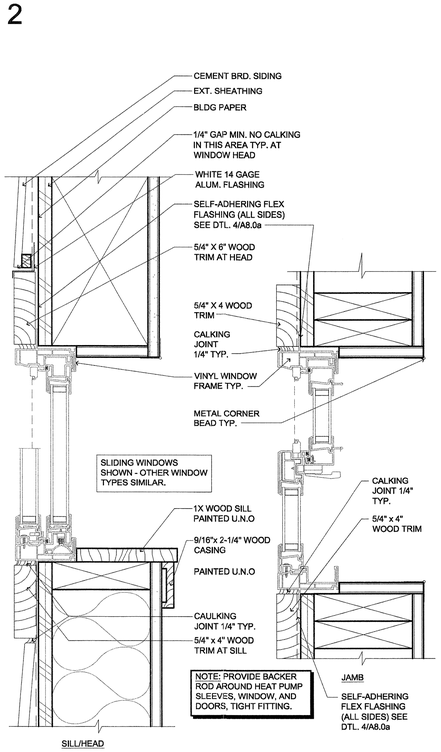

1 EXT. VINYL WINDOW
(SILL/HEAD SECTION, JAMB PLAN)
SCALE: 3" = 1'-0"
T:/08DR&WDW/630PLWIN/08630012

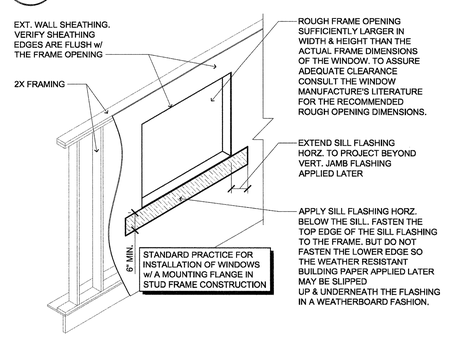

4A SILL FLASHING
WINDOW INSTALL DETAIL (1 of 4) (AAMA 2400-02)
PUBLISH DATE: 2002
SCALE: 1/4" = 1'-0"
T:/07TMPROT/100WTRPF/07100006

NOT USED

5

WINDOW SCHEDULE

NO.	LOCATION	SIZE	TYPE	DETAIL	NOTES
1	SUITE	4050	SGL. HUNG	1,2	
2	SUITE	(2)2850	SGL. HUNG	1,2	SEE TYPE A
3	SUITE/CORRIDOR	3050	SGL. HUNG	1,2	
4	SUITE	(2)3040	SGL. HUNG	1,2	SEE TYPE A
5	DINING/ACTIVITY	(2)2656	SGL. HUNG	1,2	SEE TYPE B
6	SUITE	(2)3050	SGL. HUNG	1,2	SEE TYPE A
7	DINING	(2)2820	FIXED	1,2	SEE TYPE B
8	BISTRO	(2)2616	FIXED	1,2	SEE TYPE B
9	FOYER	4050	FIXED	1,2	
10	SUITE	(2)3050	SGL. HUNG	1,2	SEE TYPE B
11	SUITE	(2)2850	SGL. HUNG	1,2	SEE TYPE B
12	DINING	(2)3036	FIXED	1,2	w/ HORZ. BAR
13	SUITE	(2)3026	SGL. HUNG	1,2	SEE TYPE A
14	DINING	(2)3020	FIXED	1,2	SEE TYPE B
15	GYM	TYPE 'F'	FIXED	1,2	
16	DORMERS	TYPE 'C'	FIXED	1,2	TRAPEZOID, NOTE 6
17	READING	TYPE 'D'	SGL. HUNG	1,2	
18	GYM	TYPE 'D'	SGH. HUNG	1,2	
19	CUPOLA	7650	CASEMENT	1,2	XOXO, NOTE 7
20	CUPOLA	10050	CASEMENT	1,2	XOXO, NOTE 7
21	OFFICE	4040	FIXED	3	RATED 45 MIN. TRUE DIVIDED
22	FOYER	4050	FIXED	1,2	w/ HORZ. BAR
23	SUITE	(2)3040	SGL. HUNG	1,2	SEE TYPE B
24	SUITE	1650	FIXED	1,2	w/ HORZ. BAR
25	SUITE	2050	FIXED	1,2	w/ HORZ. BAR
26	SUITE	4040	SGL. HUNG	1,2	
27	BEAUTY	(2)4050	SGL. HUNG	1,2	SEE TYPE A
28	SUN DECK	5660	FIXED/SLIDER	1,2	SEE TYPE G
29	SUITE	(2)3026	SGL. HUNG	1,2	SEE TYPE B
30	SUITE	(2)3050	FIXED	1,2	SEE TYPE B
31	EXERCISE	1650	FIXED	1,2	STAINED GLASS WINDOW

NOTES

1. DIMENSIONS SHOWN ARE IN FEET AND INCHES, WIDTH FOLLOWED BY HEIGHT.
2. WINDOW FRAMES TO BE VINYL.
3. WINDOW HEAD HEIGHT TO BE 7'-0" AT FINISHED FLOOR UNLESS OTHERWISE NOTED.
4. ALL GLAZING TO BE 3/4" INSULATED UNLESS OTHERWISE NOTED.
5. WINDOWS ADJACENT TO DOORS TO BE TEMPERED GLASS OR A MINIMUM OF 24" AWAY R.O. TO R.O.
6. PROVIDED (2) LEVER LATCHES PER OPERABLE LIGHTING AT EXT. SIDE
7. FINISH TO BE STAINLESS STEEL. WINDOW VENTS PER LOCAL JURISDICTION
8. "DOUBLE WINDOW" ONLY - JACKET WINDOW IS TO BE TEMPERED WHEN CALLED OUT ON PLAN

NOTE:
WINDOWS TO HAVE A U-VALUE OF 0.30 / AND A SHGC OF 0.32

NOTE: ALL GLAZING (FENESTRATION PRODUCTS) WILL BE INSTALLED WITH A CERTIFYING LABEL ATTACHED SHOWING THE "U" VALUE

NOTE: WINDOWS IN SLEEPING ROOMS DO NOT NEED TO MEET EGRESS REQUIREMENTS PER SECTION 1026.1 EXCEPTION #1 (BUILDING HAS AUTOMATIC SPRINKLER SYSTEM)

WINDOW TYPES

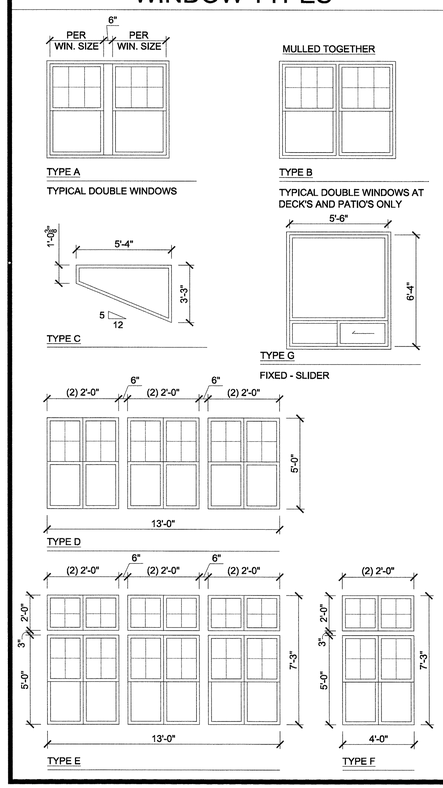

REGISTERED ARCHITECT DANIEL ROACH No. 3526 STATE OF MAINE

lenity architecture
3150 Kettle Court SE, Salem, Oregon 97301
P 503 399 1090 F 503 399 0565 W lenityarchitecture.com

COLSON AND COLSON GENERAL CONTRACTOR, INC.
2280 McGILCHRIST STREET SE, SUITE 200
SALEM, OREGON, 97302
PHONE (503) 586-7401

PORTLAND RETIREMENT RESIDENCE
802 OCEAN AVE. PORTLAND, MAINE 04103

WINDOW SCHEDULE AND DETAILS

©2015 Lenity Architecture

DATE 8/28/2015
REVISED DATE 1 9/22/2015

SHEET A8.0a

save:9/22/2015 3:34 PM wyl pltc:9/24/2015 2:25 PM kristhern file:p:\hawthorn\me-portland\arch\dt\a8.0a window schedule & details.dwg A0.0a