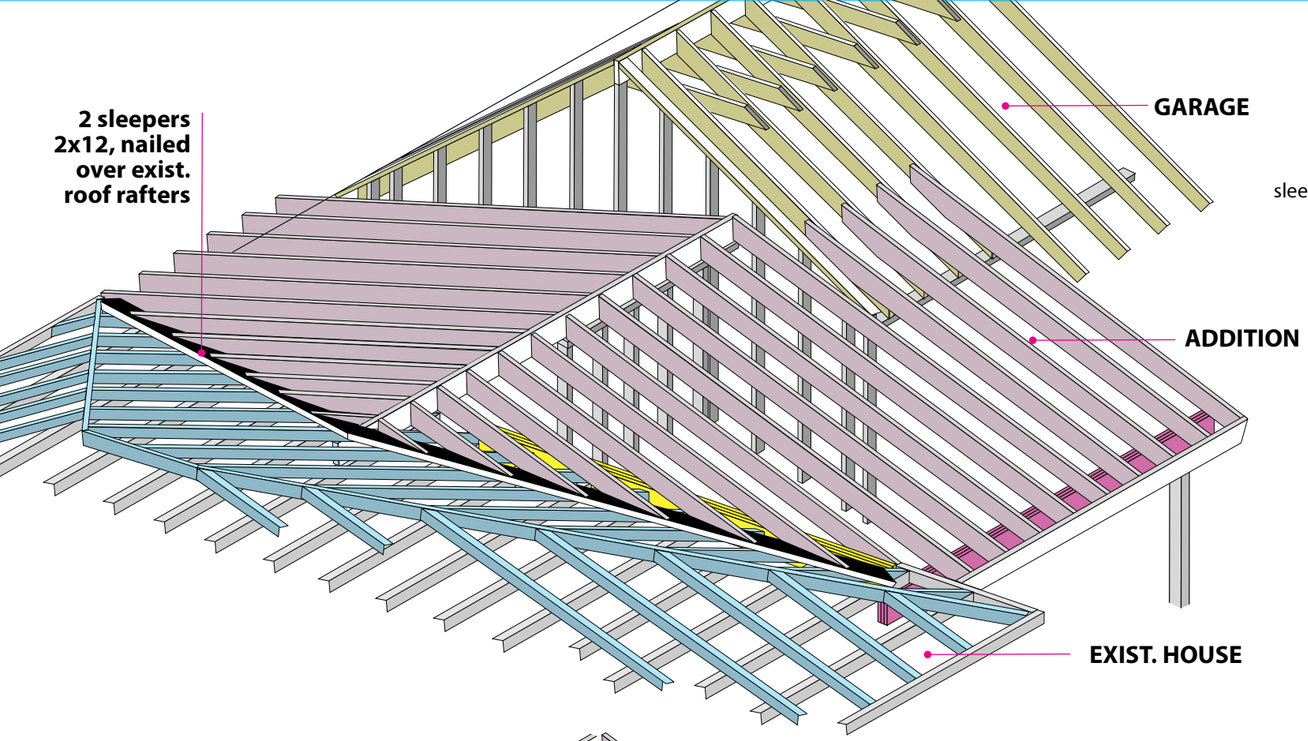

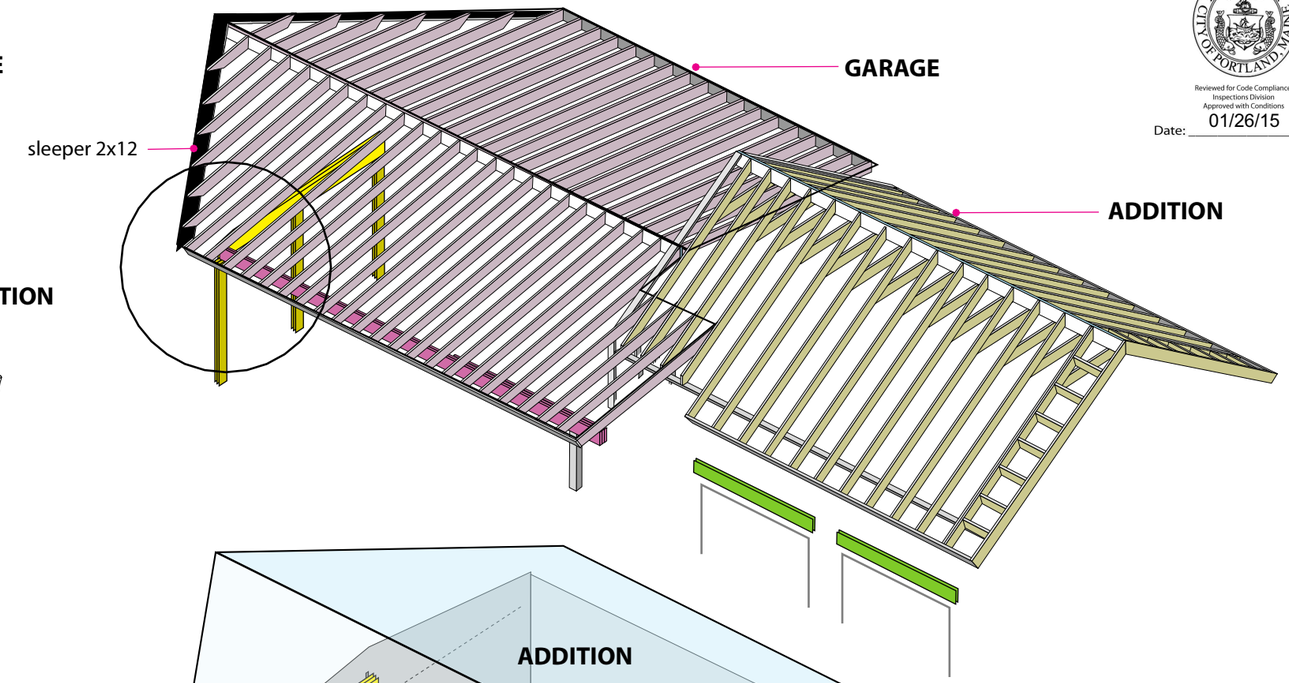

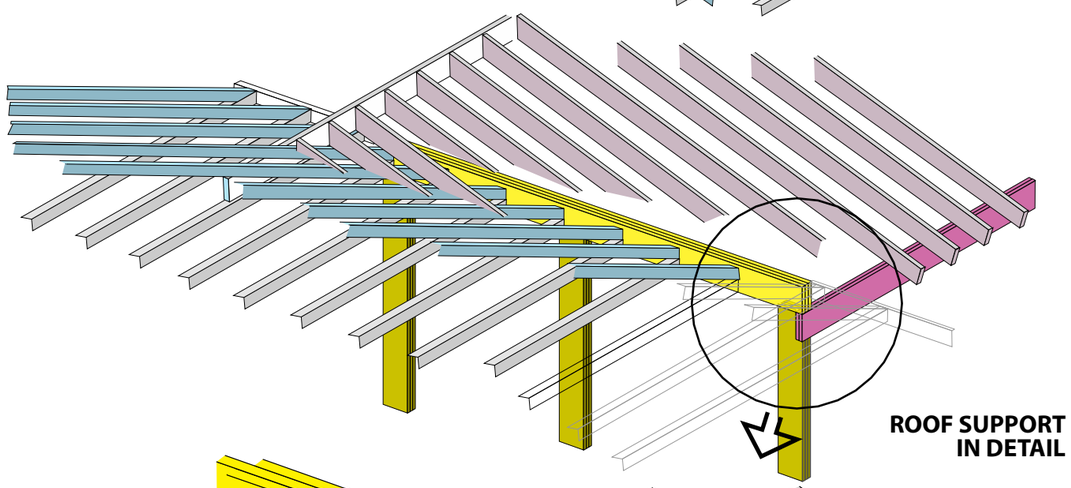

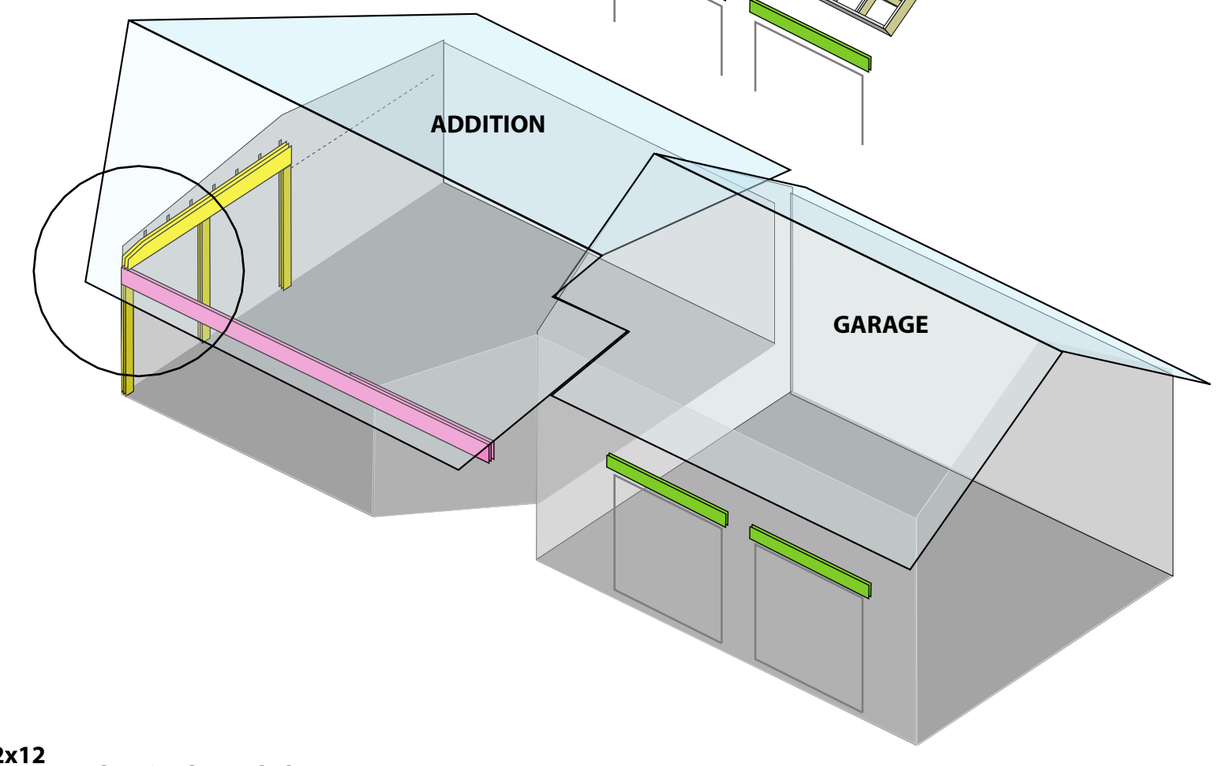

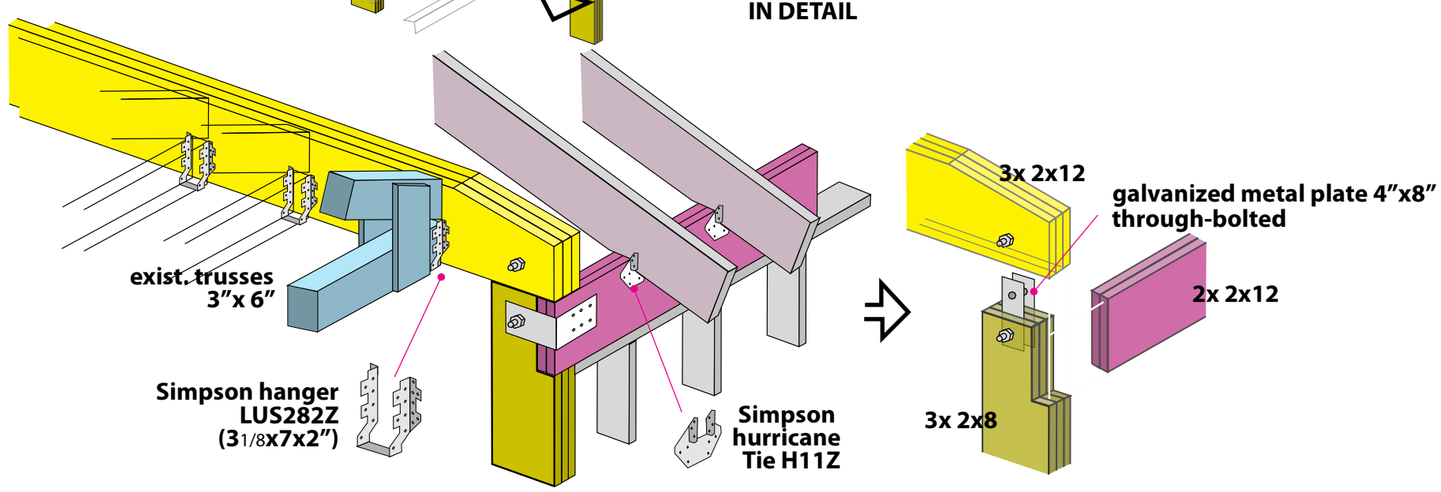

Reviewed for Code Compliance
Inspections Division
Approved with Conditions
Date: 01/26/15

3-d CONSTRUCTION VIEWS

DEED BOOK: **3191, PAGE 488**
PLAN BOOK: **17, PAGE 6**
COUNTY: **CUMBERLAND**
LOT: **1103 & 1104 + part of 1106 & 1107**
DIVISION 4 R-3 RESIDENTIAL ZONE

December 2014
131 Virginiastreet, Portland, Maine
PROPERTY OF: STONE-RUKS

SHEET 8