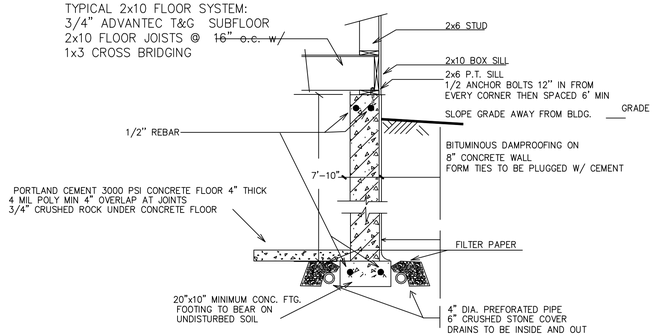


TYPICAL FOUNDATION WALL SECTION – MAIN HOUSE

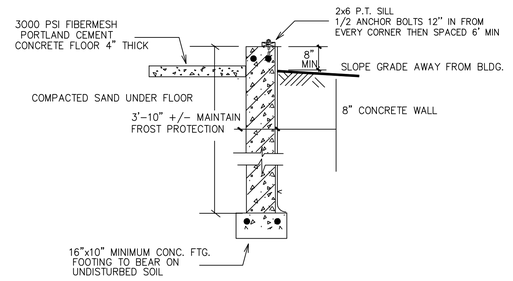


TYPICAL FROSTWALL SECTION – GARAGE

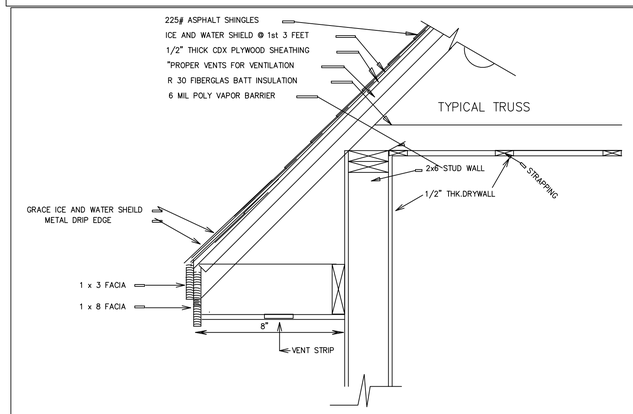


TYPICAL TRUSS TRIM DETAIL

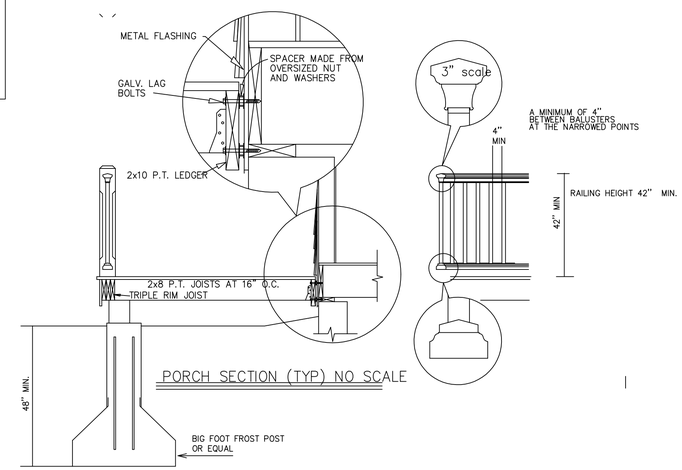


PORCH SECTION (TYP) NO SCALE

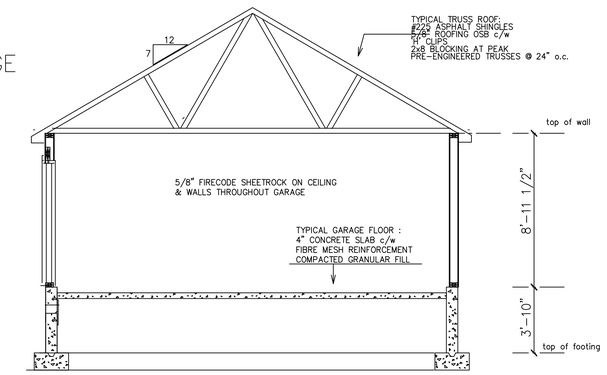


CROSS SECTION B–B

FRAMING DETAIL THE SAME AS
CROSS SECTION A–A UNLESS NOTED
SCALE: 1/4" = 1'-0"

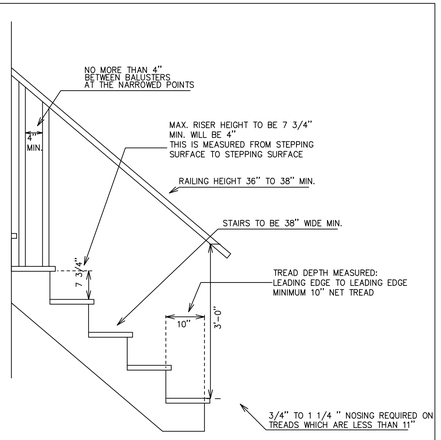


PLEASE NOTE: TO ACHIEVE A MINIMUM 10" NET TREAD
OF THE STRINGER MUST BE CUT TO 10"

TYPICAL STAIR DETAIL
ONE AND TWO FAMILY RESIDENDCE

| | | | | | | | |
|---|---|---|---|---|---|---|---|
| | | | | | | | |
| | | | | | | | |
| | | | | | | | |