* NOTE: REFER TO ARCHITECTURAL WALL SECTIONS OF EXTERIOR WALL CONSTRUCTION FOR ADDITIONAL INFORMATION REGARDING BUILDING WALL/ROOF MATERIALS.

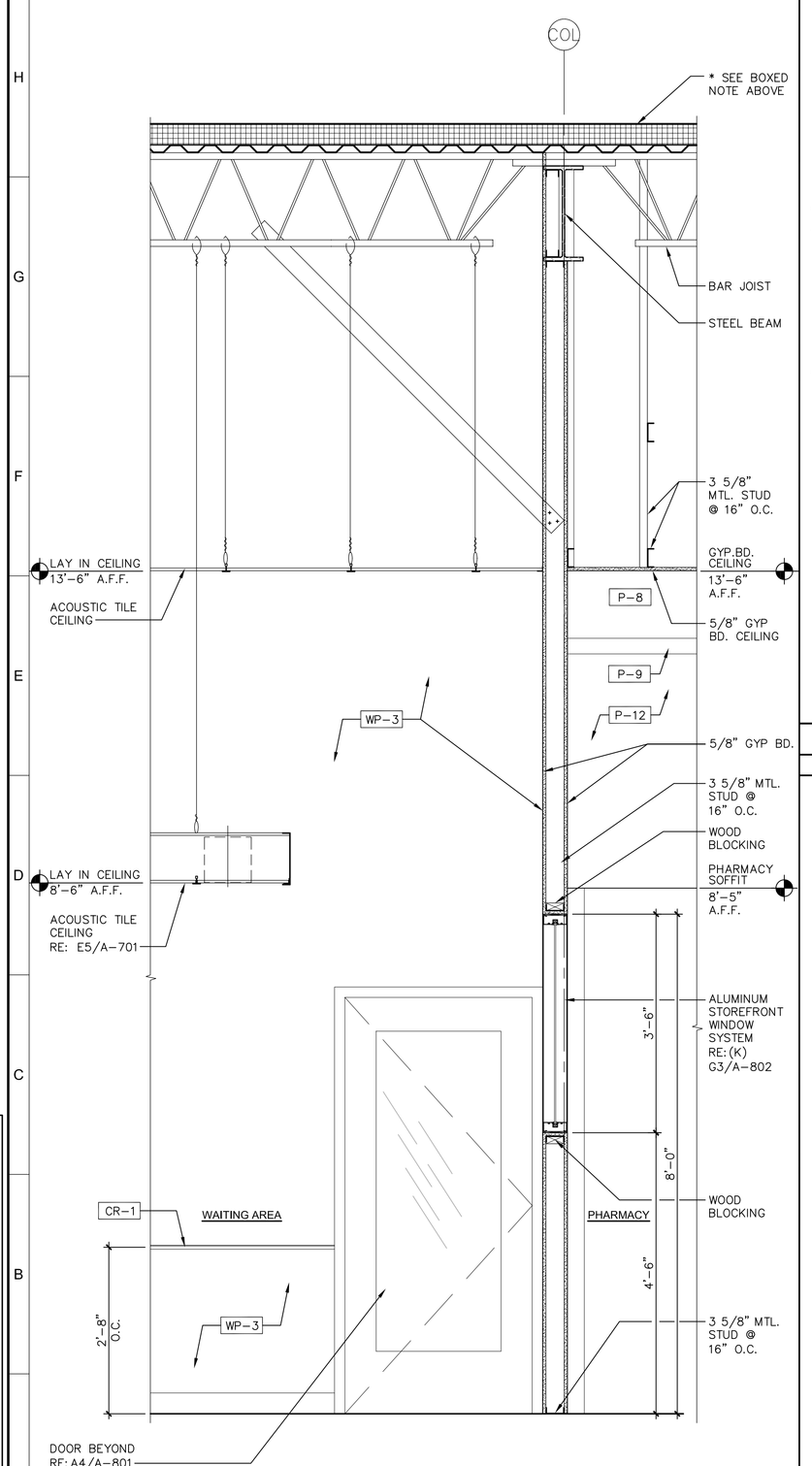

A1 | WALL SECTION AT PHARMACY
3/4" = 1'-0"

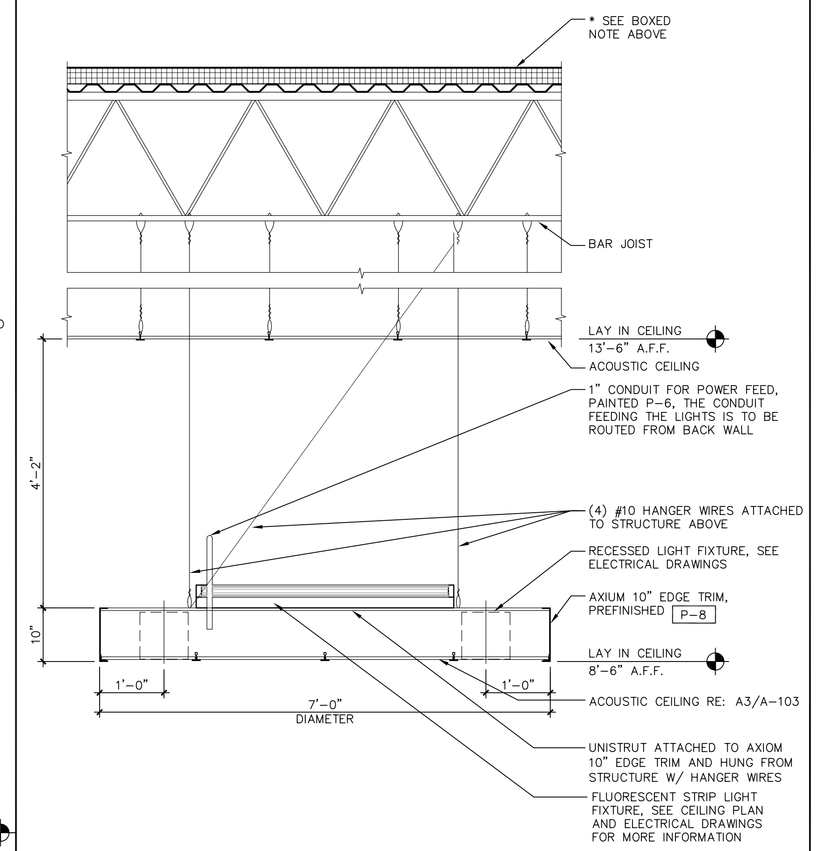

E5 | DETAIL - WAITING AREA SOFFIT
3/4" = 1'-0" | RE: D9/A-702

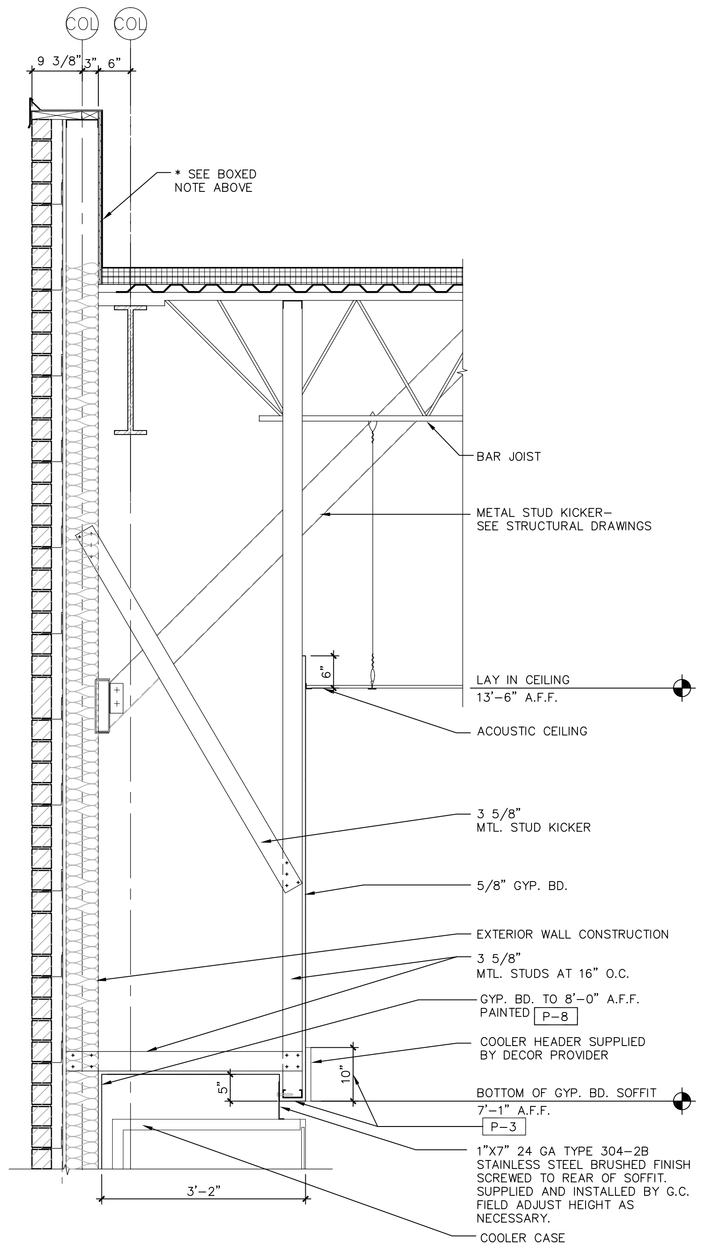

E9 | DETAIL - COOLER SOFFIT
3/4" = 1'-0" | RE: A3/A-103

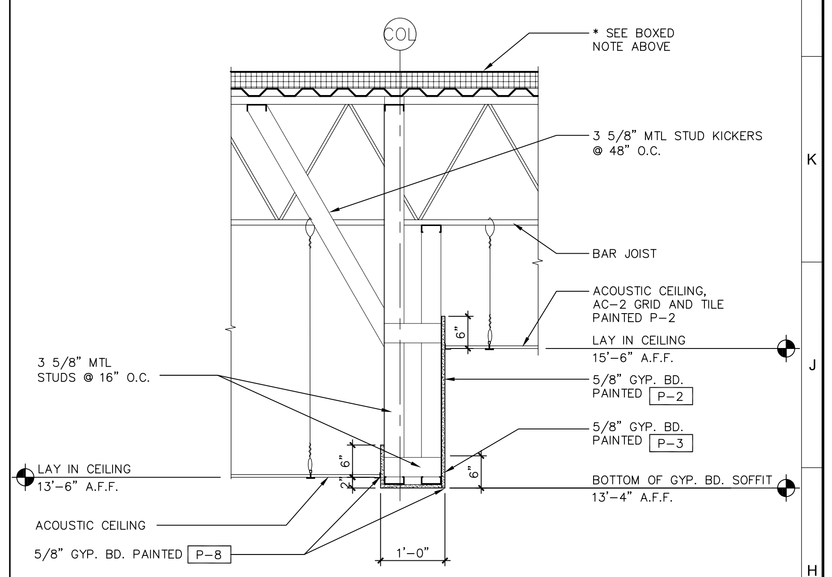

H13 | DETAIL - COSMETICS SOFFIT
3/4" = 1'-0" | RE: A3/A-103

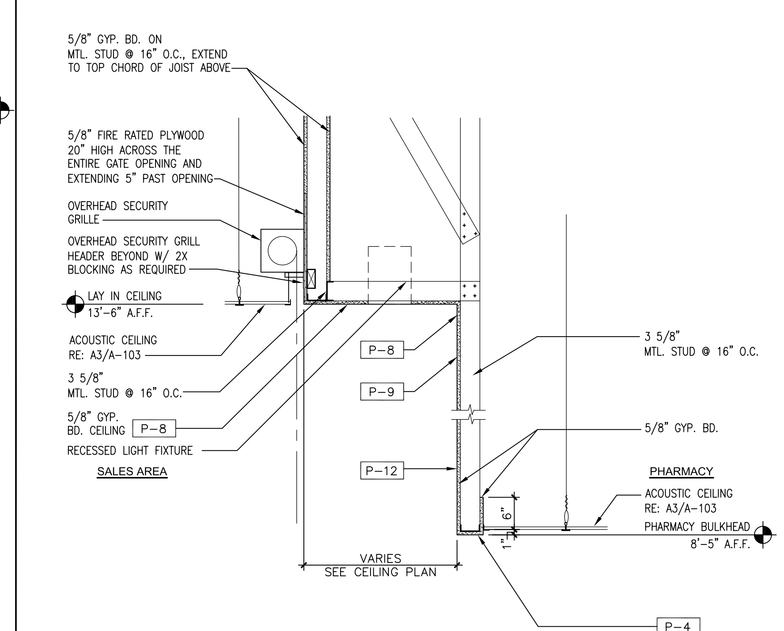

A5 | DETAIL - AT OVERHEAD SECURITY SHUTTER
3/4" = 1'-0" | RE: A3/A-103

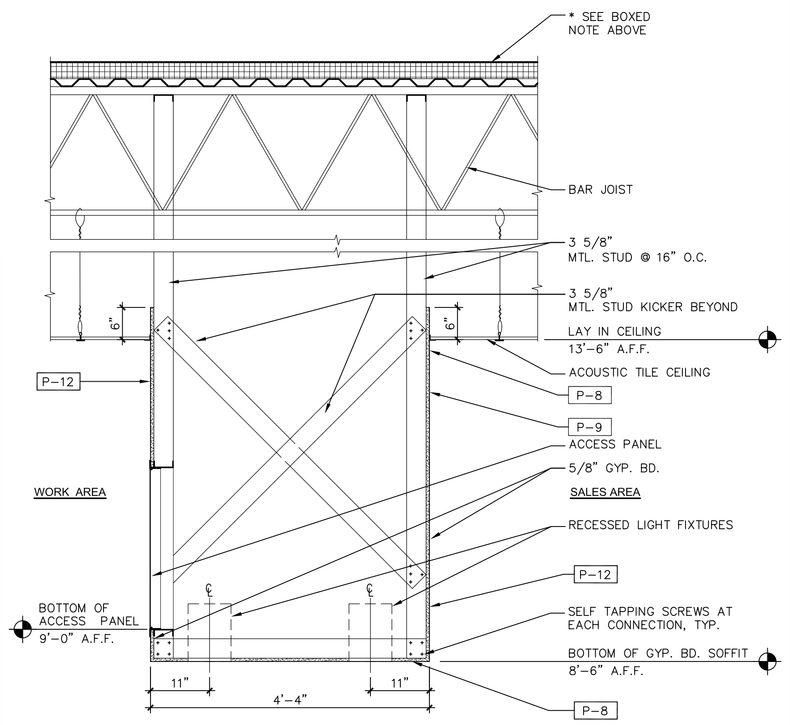

A9 | PHOTO CENTER SOFFIT DETAIL
3/4" = 1'-0" | RE: A3/A-103

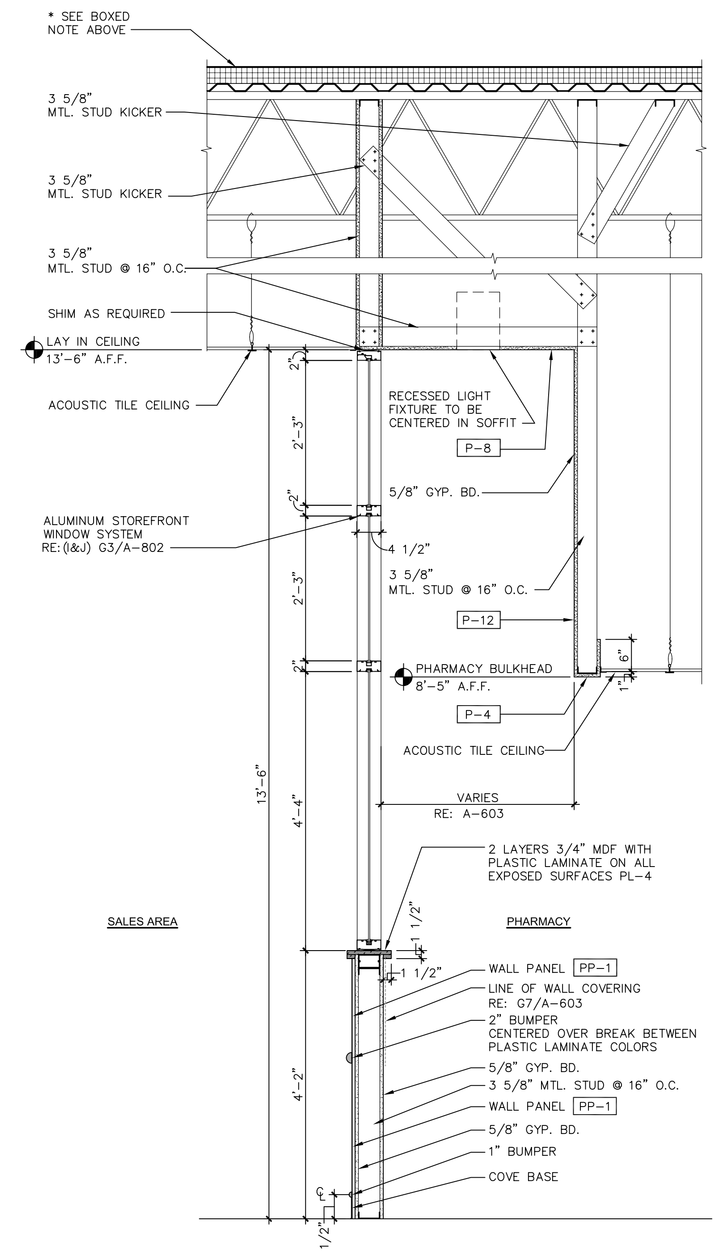

A13 | DETAIL - AT PHARMACY
3/4" = 1'-0"

BRUCE RONAYNE HAMILTON ARCHITECTS
ARCHITECTURE
LAND PLANNING
INTERIOR DESIGN
3D VISUALIZATION
833 TURNPIKE ROAD
P.O. BOX 104
NEW IPSWICH
NEW HAMPSHIRE 03071

RITE AID STORE #4122
WASHINGTON & ALLEN AVENUE
PORTLAND, MAINE

ISSUED FOR BUILDING PERMIT/GC BIDDING

REVISIONS
1 10-27-06

Drawn RCK
Checked
Approved

Project No. 0525
Date: 10-27-06

Title
INTERIOR DETAILS

Sheet No.
A-701