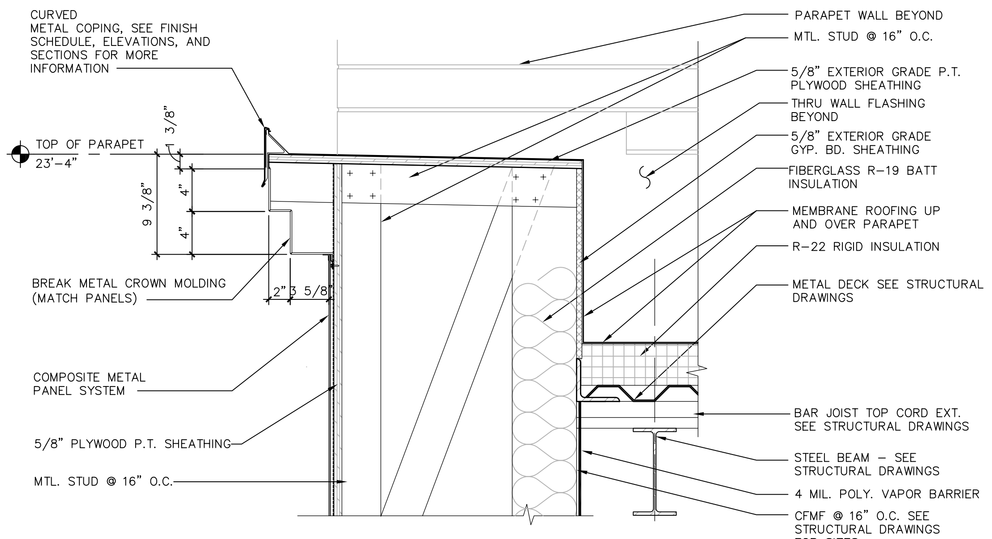

K3 COPING DETAIL
1 1/2"= 1'-0"

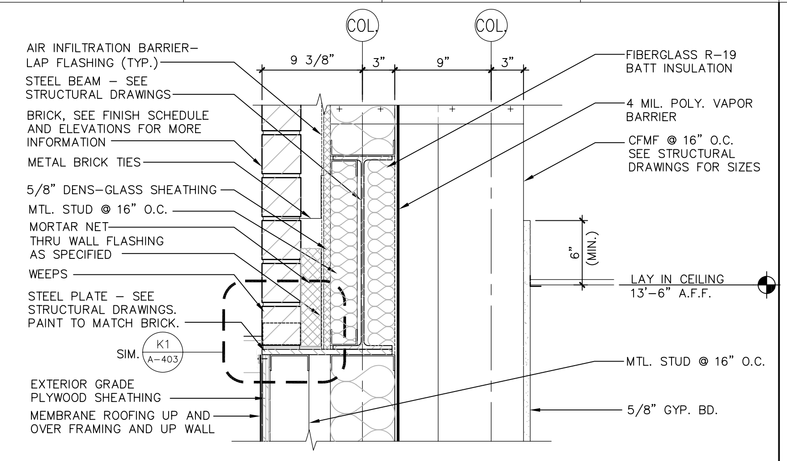

K9 HEAD / SOFFIT DETAIL
1 1/2"= 1'-0"

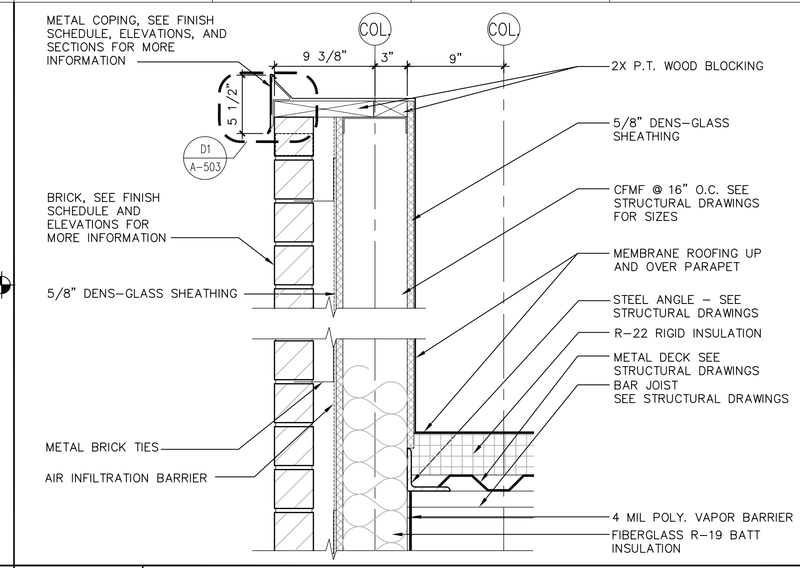

K13 PARAPET DETAIL
1 1/2"= 1'-0" RE: A2/A-401

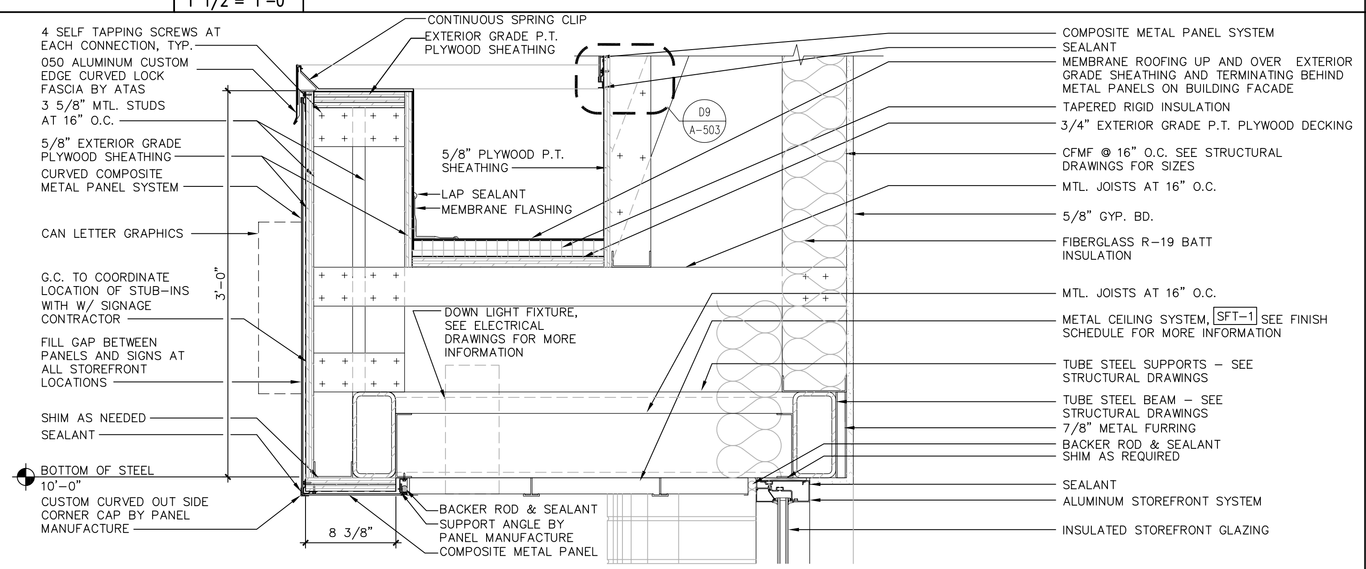

G1 DETAIL - AT ENTRY SIGNBAND
1 1/2"= 1'-0"

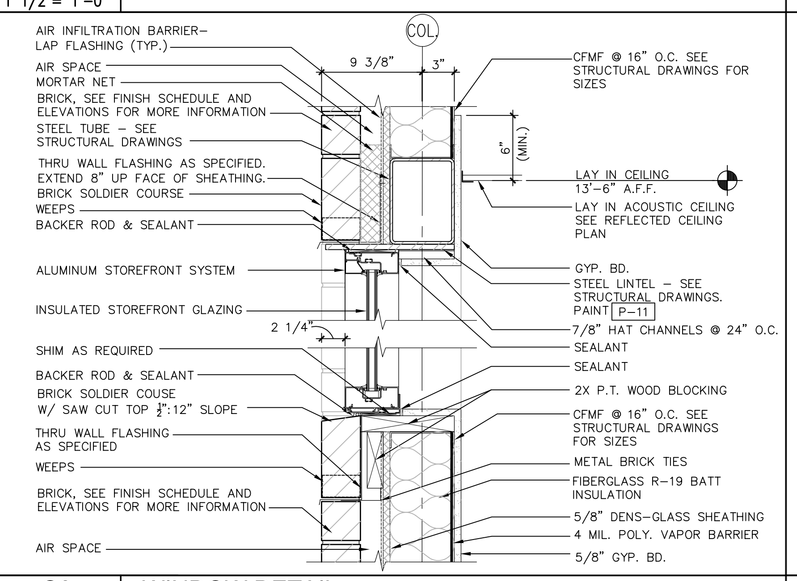

G9 WINDOW DETAIL
1 1/2"= 1'-0"

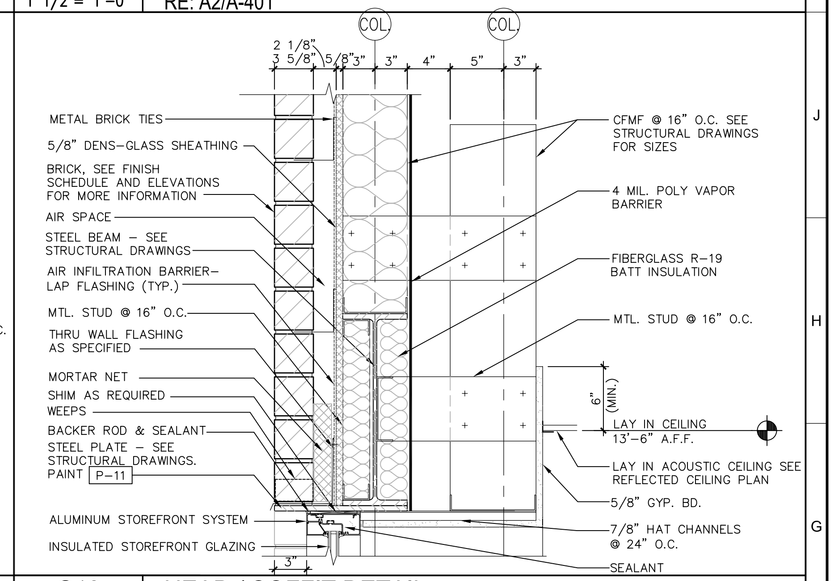

G13 HEAD / SOFFIT DETAIL
1 1/2"= 1'-0" RE: A2/A-401

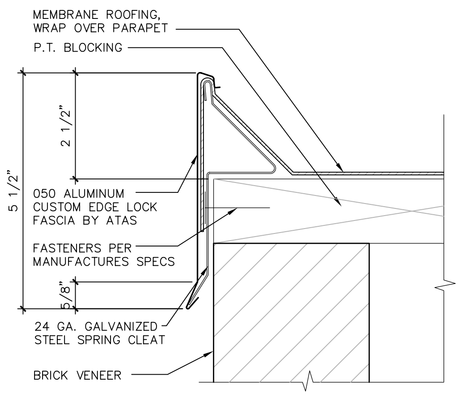

D1 COPING DETAIL
6"= 1'-0"

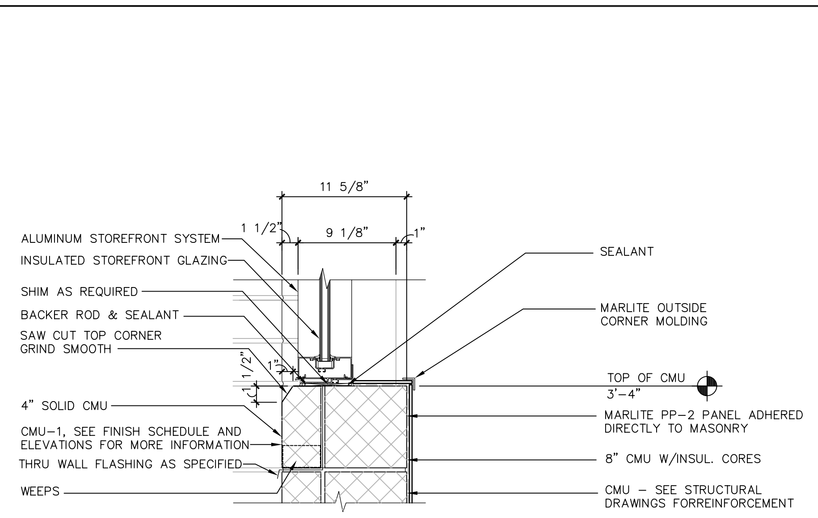

D4 SILL DETAIL
1 1/2"= 1'-0"

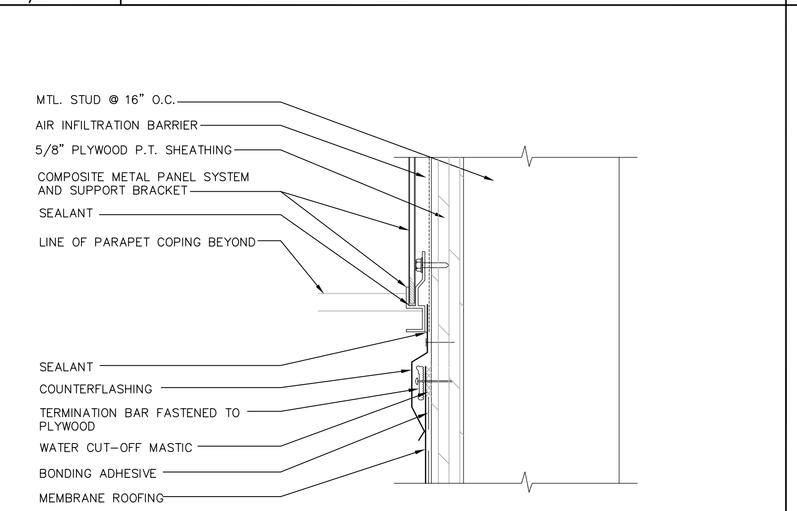

D9 ENTRY FACADE BASE DETAIL
6"= 1'-0"

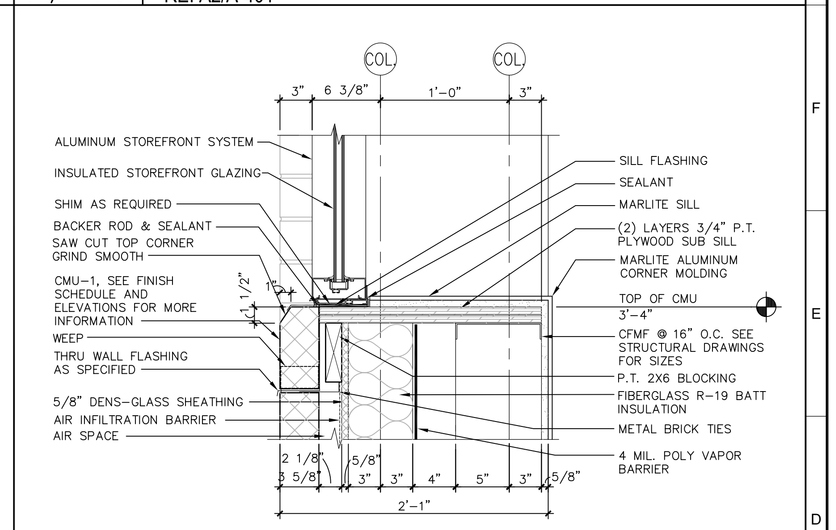

D13 SILL DETAIL
1 1/2"= 1'-0" RE: A2/A-401

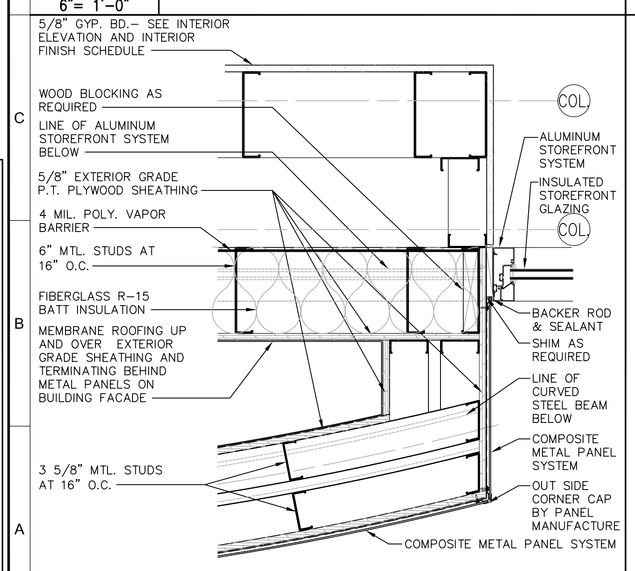

A1 JAMB DETAIL
1 1/2"= 1'-0" RE: A1/A-201

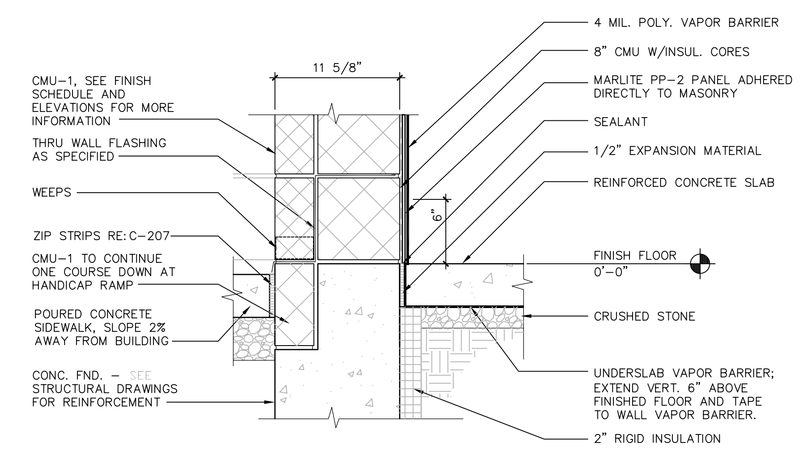

A4 WALL BASE DETAIL
1 1/2"= 1'-0" RE: A7/A-402

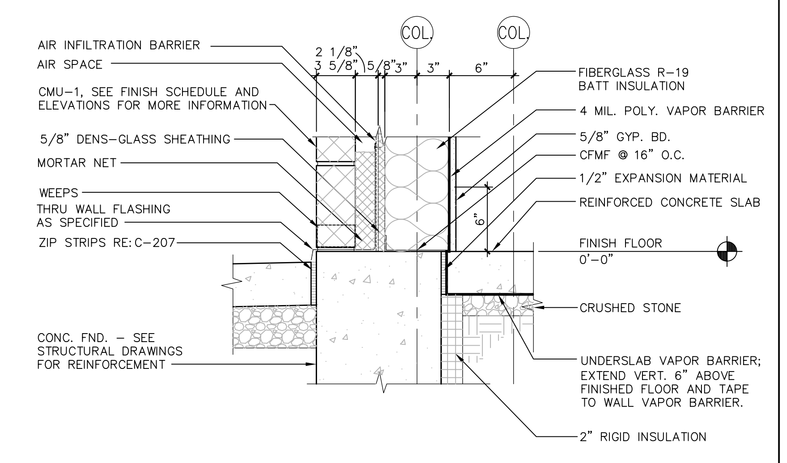

A9 WALL BASE DETAIL
1 1/2"= 1'-0" RE: A7/A-401

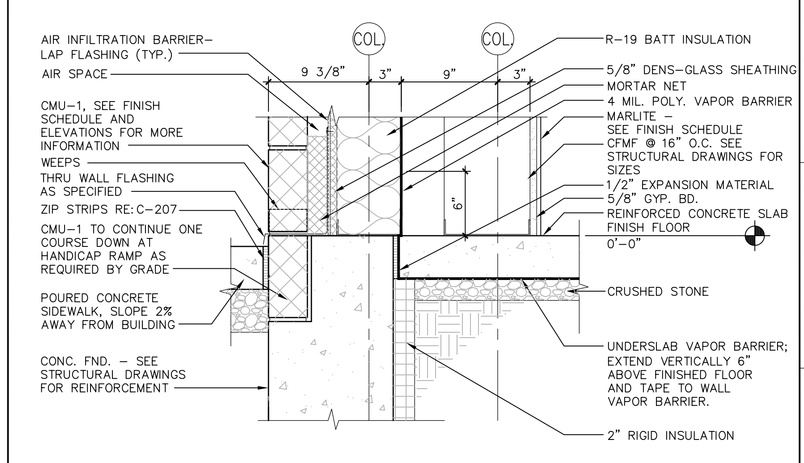

A13 WALL BASE DETAIL @ WINDOW
1 1/2"= 1'-0" RE: A2/A-401

BRUCE RONAYNE HAMILTON ARCHITECTS
ARCHITECTURE
LAND PLANNING
INTERIOR DESIGN
3D VISUALIZATION
535 TURNPIKE ROAD
P.O. BOX 104
NEW IPSWICH
NEW HAMPSHIRE 03071

RITE AID STORE #4122
WASHINGTON & ALLEN AVENUE
PORTLAND, MAINE

RITE AID

ISSUED FOR BUILDING PERMIT/GC BIDDING

REVISIONS 10-27-06

Drawn RCK
Checked
Approved

Project No. 0525
Date: 10-27-06

Title
EXTERIOR DETAILS

Sheet No.
A-503