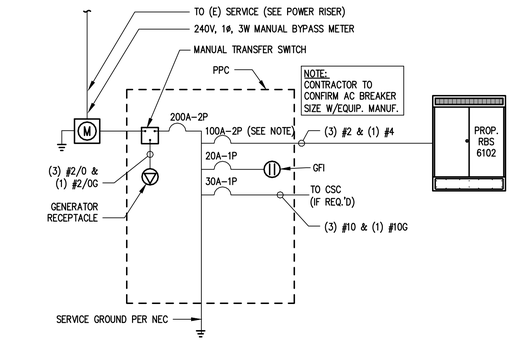

ONE LINE DIAGRAM

SCALE: NOT TO SCALE

1 / E-1

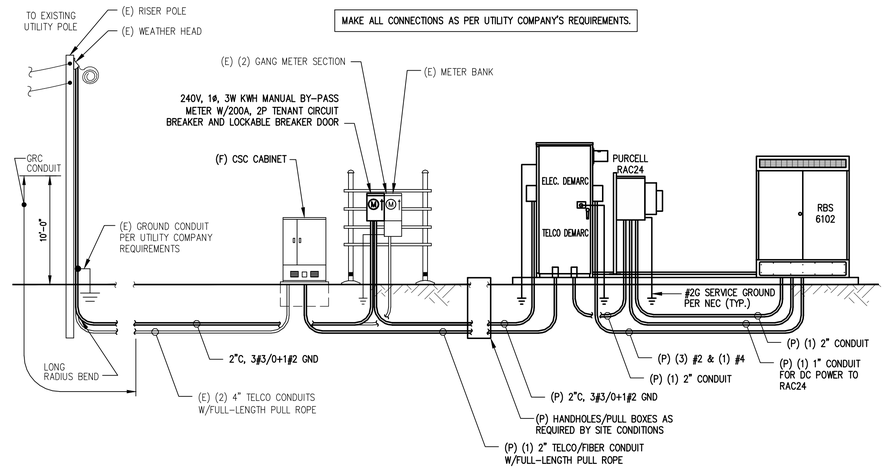

POWER/TELCO RISER DIAGRAM

SCALE: NOT TO SCALE

2 / E-1

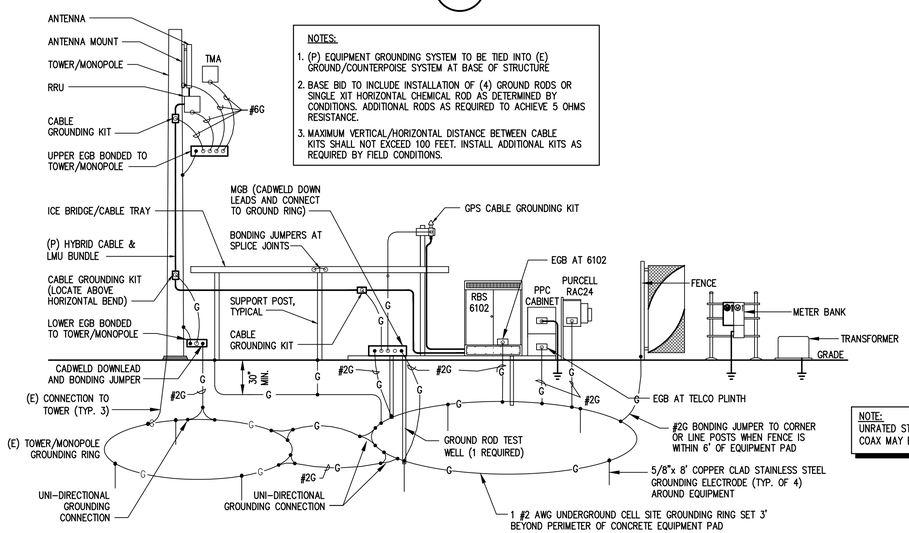

NOTES:

1. (P) EQUIPMENT GROUNDING SYSTEM TO BE TIED INTO (E) GROUND/COUNTERPOISE SYSTEM AT BASE OF STRUCTURE
2. BASE BID TO INCLUDE INSTALLATION OF (4) GROUND RODS OR SINGLE XIT HORIZONTAL CHEMICAL ROD AS DETERMINED BY CONDITIONS. ADDITIONAL RODS AS REQUIRED TO ACHIEVE 5 OHMS RESISTANCE.
3. MAXIMUM VERTICAL/HORIZONTAL DISTANCE BETWEEN CABLE KITS SHALL NOT EXCEED 100 FEET. INSTALL ADDITIONAL KITS AS REQUIRED BY FIELD CONDITIONS.

GROUNDING RISER DIAGRAM

SCALE: NOT TO SCALE

3 / E-1

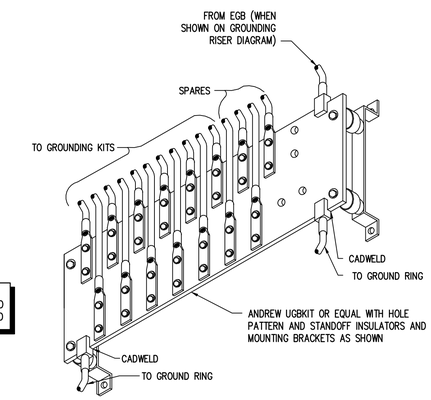

MASTER GROUND BAR (MGB)

SCALE: NOT TO SCALE

4 / E-1

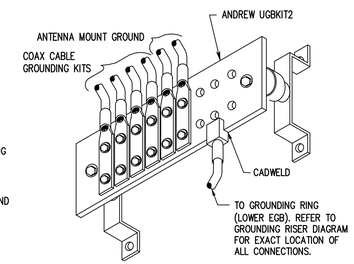

GROUND BAR (EGB)

SCALE: NOT TO SCALE

5 / E-1

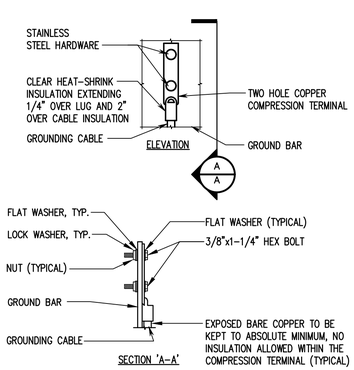

NOTE:

1. "DOUBLING UP" OR "STACKING " OF CONNECTION IS NOT PERMITTED.
2. OXIDE INHIBITING COMPOUND TO BE USED AT ALL LOCATIONS.
3. CADWELL DOWNLEADS FROM UPPER EGB, LOWER EGB AND MGB.

TYPICAL GROUND BAR CONNECTIONS DETAIL

SCALE: NOT TO SCALE

6 / E-1

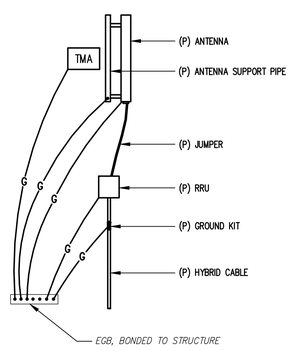

HYBRID CABLE CONNECTION AND GROUNDING DETAIL

SCALE: NOT TO SCALE

7 / E-1

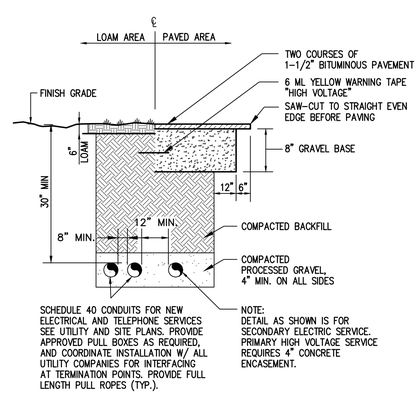

BURIED CONDUIT DETAIL

SCALE: NOT TO SCALE

8 / E-1

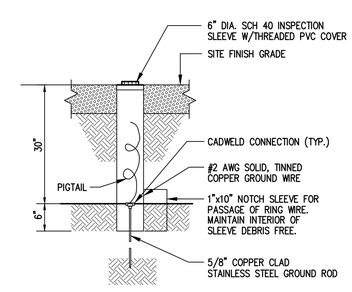

GROUND ROD TEST WELL DETAIL

SCALE: NOT TO SCALE

9 / E-1

ELECTRICAL LEGEND

	NEW PANEL BOARD, SURFACE MOUNTED
	EXISTING PANEL BOARD, SURFACE MOUNTED
T	DRY TYPE TRANSFORMER
M	METER
	CIRCUIT BREAKER
	NON-FUSIBLE DISCONNECT SWITCH, MOUNTED 54" A.F.F.
F	FUSIBLE DISCONNECT SWITCH, MOUNTED 54"A.F.F.
TVSS	TRANSIENT VOLTAGE SURGE SUPPRESSOR WITH BUILT-IN FUSES, SURFACE MOUNTED
	DUPLEX OUTLET, SURFACE MOUNTED, 20 AMPS, 125 VOLTS, SINGLE PHASE
J	JUNCTION BOX, SURFACE MOUNTED 18" A.F.F.
	EXPOSED WIRING
	HOME RUNS, MINIMUM 2#10 + 1#10G IN 3/4" CONDUIT U.O.N.
A.F.F.	ABOVE FINISHED FLOOR
U.O.N.	UNLESS OTHERWISE NOTED
WP	WEATHERPROOF
GFI	GROUND FAULT INTERRUPTER
A	AMPERE
V	VOLT
KWH	KILOWATT - HOUR
C	CONDUIT
GRC	GALVANIZED RIGID CONDUIT
G	GROUND
	GROUND
MGB	MASTER GROUND BAR ○MECHANICAL CONNECTION ●CADWELD CONNECTION
EGB	EQUIPMENT GROUND BAR ○MECHANICAL CONNECTION ●CADWELD CONNECTION
G	GROUND COPPER WIRE, SIZE AS NOTED
	EXPOSED WIRING
	COAXIAL CABLE
	5/8"x8' COPPER CLAD STAINLESS STEEL GROUND ROD
	•EXOTHERMIC (CADWELD) OR ○MECHANICAL (COMPRESSION TYPE) CONNECTION
PPC	POWER PROTECTION CABINET

ELECTRICAL AND GROUNDING NOTES

1. ALL ELECTRICAL WORK SHALL CONFORM TO THE REQUIREMENTS OF THE NATIONAL ELECTRICAL CODE (NEC) AS WELL AS APPLICABLE STATE AND LOCAL CODES.
2. ALL ELECTRICAL ITEMS SHALL BE U.L. APPROVED OR LISTED AND PROCURED PER SPECIFICATION REQUIREMENTS.
3. THE ELECTRICAL WORK INCLUDES ALL LABOR AND MATERIAL DESCRIBED BY DRAWINGS AND SPECIFICATION INCLUDING INCIDENTAL WORK TO PROVIDE COMPLETE OPERATING AND APPROVED ELECTRICAL SYSTEM.
4. GENERAL CONTRACTOR SHALL PAY FEES FOR PERMITS, AND IS RESPONSIBLE FOR OBTAINING SAID PERMITS AND COORDINATION OF INSPECTIONS.
5. ELECTRICAL AND TELCO WIRING OUTSIDE A BUILDING AND EXPOSED TO WEATHER SHALL BE IN WATER TIGHT GALVANIZED RIGID STEEL CONDUITS OR SCHEDULE 80 PVC (AS PERMITTED BY CODE) AND WHERE REQUIRED IN LIQUID TIGHT FLEXIBLE METAL OR NONMETALLIC CONDUITS.
6. BURIED CONDUIT SHALL BE SCHEDULE 40 PVC.
7. ELECTRICAL WIRING SHALL BE COPPER WITH TYPE XHHW, THWN, OR THHNINSULATION.
8. RUN ELECTRICAL CONDUIT OR CABLE BETWEEN ELECTRICAL UTILITY DEMARCATION POINT AND PROJECT OWNER CELL SITE PPC AS INDICATED ON THIS DRAWING. PROVIDE FULL LENGTH PULL ROPE. COORDINATE INSTALLATION WITH UTILITY COMPANY.
9. RUN TELCO CONDUIT OR CABLE BETWEEN TELEPHONE UTILITY DEMARCATION POINT AND PROJECT OWNER CELL SITE TELCO CABINET AND BTS CABINET AS INDICATED ON THIS DRAWING PROVIDE FULL LENGTH PULL ROPE IN INSTALLED TELCO CONDUIT. PROVIDE GREENLEE CONDUIT MEASURING TAPE AT EACH END.
10. WHERE CONDUIT BETWEEN BTS AND PROJECT OWNER CELL SITE PPC AND BETWEEN BTS AND PROJECT OWNER CELL SITE TELCO SERVICE CABINET ARE UNDERGROUND USE PVC, SCHEDULE 40 CONDUIT. ABOVE THE GROUND PORTION OF THESE CONDUITS SHALL BE PVC CONDUIT.
11. ALL EQUIPMENT LOCATED OUTSIDE SHALL HAVE NEMA 3R ENCLOSURE.
12. PPC SUPPLIED BY PROJECT OWNER.
13. GROUNDING SHALL COMPLY WITH NEC ART. 250. ADDITIONALLY, GROUNDING, BONDING AND LIGHTNING PROTECTION SHALL BE DONE IN ACCORDANCE WITH "T-MOBILE BTS SITE GROUNDING STANDARDS".
14. GROUND COAXIAL CABLE SHIELDS MINIMUM AT BOTH ENDS USING MANUFACTURERS COAX CABLE GROUNDING KITS SUPPLIED BY PROJECT OWNER.
15. USE #6 COPPER STRANDED WIRE WITH GREEN COLOR INSULATION FOR ABOVE GRADE GROUNDING (UNLESS OTHERWISE SPECIFIED) AND #2 SOLID TINNED BARE COPPER WIRE FOR BELOW GRADE GROUNDING AS INDICATED ON THE DRAWING.
16. ALL GROUND CONNECTIONS TO BE BURNDY HYGROUND COMPRESSION TYPE CONNECTORS OR CADWELD EXOTHERMIC WELD. DO NOT ALLOW BARE COPPER WIRE TO BE IN CONTACT WITH GALVANIZED STEEL.
17. ROUTE GROUNDING CONDUCTORS ALONG THE SHORTEST AND STRAIGHTEST PATH POSSIBLE, EXCEPT AS OTHERWISE INDICATED. GROUNDING LEADS SHOULD NEVER BE BENT AT RIGHT ANGLE. ALWAYS MAKE AT LEAST 12" RADIUS BENDS. #6 WIRE CAN BE BENT AT 6" RADIUS WHEN NECESSARY. BOND ANY METAL OBJECTS WITHIN 6 FEET OF PROJECT OWNER EQUIPMENT OR CABINET TO MASTER GROUND BAR OR GROUNDING RING.
18. CONNECTIONS TO GROUND BARS SHALL BE MADE WITH TWO HOLE COMPRESSION TYPE COPPER LUGS. APPLY OXIDE INHIBITING COMPOUND TO ALL LOCATIONS.
19. APPLY OXIDE INHIBITING COMPOUND TO ALL COMPRESSION TYPE GROUND CONNECTIONS.
20. CONTRACTOR SHALL PROVIDE AND INSTALL OMNI DIRECTIONAL ELECTRONIC MARKER SYSTEM (EMS) BALLS OVER EACH GROUND ROD AND BONDING POINT BETWEEN EXISTING TOWER/ MONOPOLE GROUNDING RING AND EQUIPMENT GROUNDING RING.
21. CONTRACTOR SHALL TEST COMPLETED GROUND SYSTEM AND RECORD RESULTS FOR PROJECT CLOSE-OUT DOCUMENTATION. 5 OHMNS MINIMUM RESISTANCE REQUIRED.
22. CONTRACTOR SHALL CONDUCT ANTENNA, COAX, AND LNA RETURN-LOSS AND DISTANCE-TO-FAULT MEASUREMENTS (SWEEP TESTS) AND RECORD RESULTS FOR PROJECT CLOSE OUT.

T-MOBILE NORTHEAST LLC

15 COMMERCE WAY, SUITE B
NORTON, MA 02766

OFFICE: (508) 286-2700
FAX: (508) 286-2893

CHAPPELL ENGINEERING ASSOCIATES, LLC
Civil · Structural · Land Surveying

R.K. EXECUTIVE CENTRE
201 BOSTON POST ROAD WEST
SUITE 101
MARLBOROUGH, MA 01752
(508)481-7400
www.chappellengineering.com

STATE OF MAINE
CLEMENT J. SALEK
No. 11793
LICENSED PROFESSIONAL ENGINEER

APPROVALS

LANDLORD _____

LEASING _____

R.F. _____

ZONING _____

CONSTRUCTION _____

A/E _____

PROJECT NO: 4PB-1288-A

DRAWN BY: CMC

CHECKED BY: JMF

SUBMITTALS

3	08/10/17	CONSTRUCTION FINAL
2	05/16/17	CONSTRUCTION FINAL
1	03/15/17	CONSTRUCTION
0	03/30/15	ISSUED FOR REVIEW

THIS DOCUMENT IS THE CREATION, DESIGN, PROPERTY AND COPYRIGHTED WORK OF T-MOBILE NORTHEAST, LLC. ANY DUPLICATION OR USE WITHOUT EXPRESS WRITTEN CONSENT IS STRICTLY PROHIBITED. DUPLICATION AND USE BY GOVERNMENT AGENCIES FOR THE PURPOSES OF CONDUCTING THEIR LAWFULLY AUTHORIZED REGULATORY AND ADMINISTRATIVE FUNCTIONS IS SPECIFICALLY ALLOWED.

4PB-1288-A

WGME INC.

81 NORTHPORT DRIVE
PORTLAND, ME 04103

SHEET TITLE

ELECTRICAL & GROUNDING NOTES, RISERS & DETAILS

SHEET NUMBER

E-1

CEA JOB NO.: 1622.01

Reviewed for Code Compliance Inspection Division Portland, Maine
Date: 08/15/17