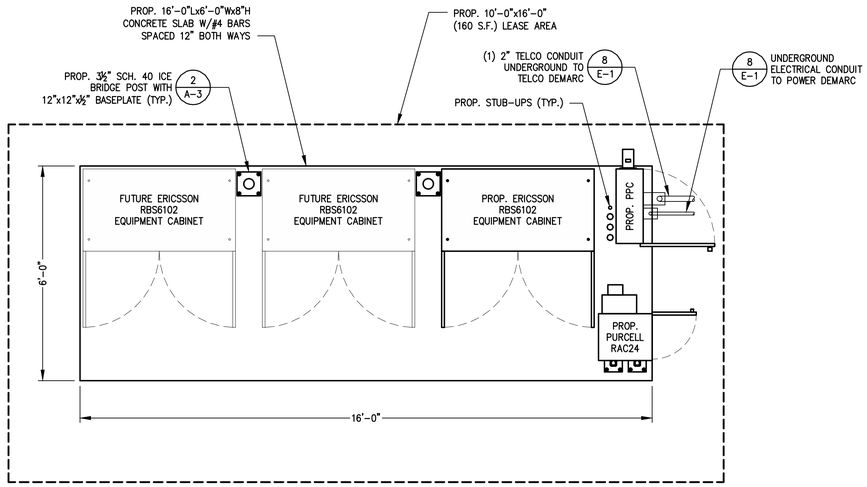

PLAN AT EQUIPMENT PAD

1 / S-1

SCALE: 1/2" = 1'-0"

0 1 2 4 6

PURCELL SITE SUPPORT CABINET RAC24
DIMENSIONS: 24.0"H x 15.7"W x 20.0"D
TOTAL OF 1

SSC DETAILS

4 / S-1

SCALE: N.T.S.

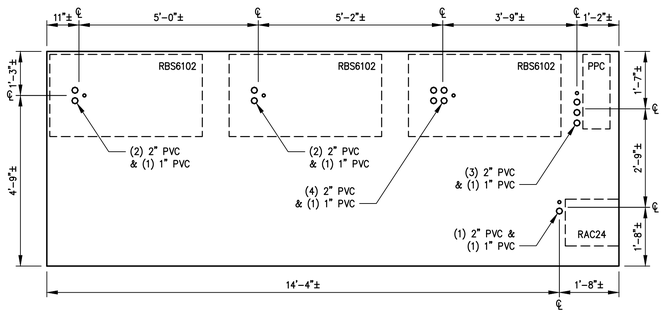

STUB-UP PLAN

2 / S-1

SCALE: 1/2" = 1'-0"

0 1 2 4 6

STUB-UP NOTES

POWER

- (1) 2" PVC CONDUIT FROM PPC TO EACH RBS6102

TELCO

- (1) 2" PVC CONDUIT FROM RAC24 TO PRIMARY RBS6102
- (1) 2" PVC CONDUIT FROM PRIMARY RBS6102 TO EACH FUTURE RBS6102

GROUND

- (1) 1" PVC CONDUIT WITH #2AWG TINNED TO GROUND RING AT EACH CABINET (LEAVE 24" PIGTAIL)

INSTALLATION NOTES

- ALL ABOVE GRADE CONDUITS AT PPC/RAC24 TO BE RGS-PVC INSIDE PAD/UNDER CABINETS.
- PVC STUB-UP LOCATIONS UNDER RBS6102 CABINETS ARE JUST A GUIDELINE. ELECTRICIAN TO V.I.F. EXACT LOCATION TO BE USED AS NEEDED PER BEND RADIUS OF LIQUIDTITE.
- PROPERLY SPACE EACH STUB-UP TO RECEIVE LIQUID-TITE CONNECTOR
- CAP ALL UNUSED STUB-UPS

NOTES:

1. FUTURE EQUIPMENT NOT SHOWN FOR CLARITY. REFER TO EQUIPMENT PLAN ABOVE FOR LOCATIONS.

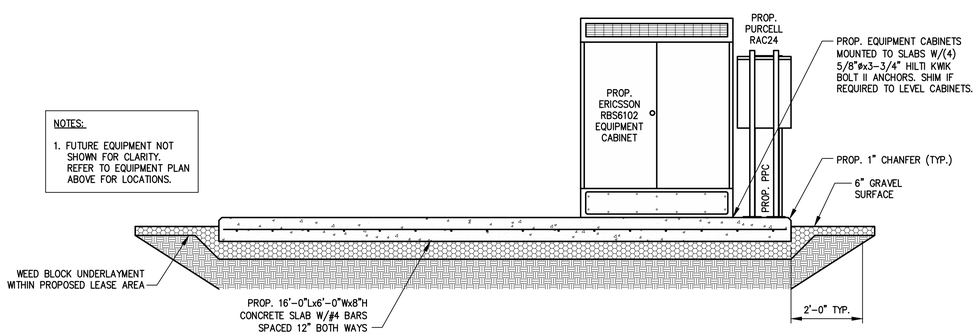

SECTION AT EQUIPMENT PAD

3 / S-1

SCALE: 1/2" = 1'-0"

0 1 2 4 6

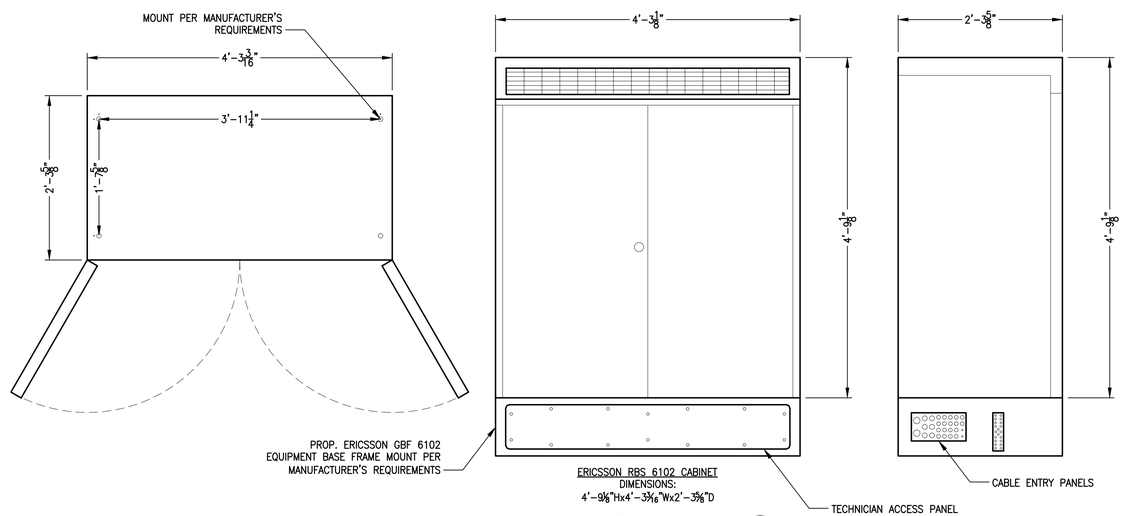

ERICSSON RBS 6102 CABINET
DIMENSIONS:
4'-9⅛"Hx4'-3 3/16"Wx2'-3⅝"D

RBS6102 DETAILS

5 / S-1

SCALE: N.T.S.

STRUCTURAL NOTES:

1. DESIGN REQUIREMENTS ARE PER STATE BUILDING CODE AND APPLICABLE SUPPLEMENTS, ANSI/ASCE7, EIA/TIA-222-F STRUCTURAL STANDARDS FOR STEEL ANTENNA SUPPORTING STRUCTURES.
2. CONTRACTOR SHALL VERIFY ALL DIMENSIONS AND CONDITIONS IN THE FIELD PRIOR TO FABRICATION AND ERECTION OF ANY MATERIAL. ANY UNUSUAL CONDITIONS SHALL BE REPORTED TO THE ATTENTION OF THE CONSTRUCTION MANAGER.
3. DESIGN AND CONSTRUCTION OF STRUCTURAL STEEL SHALL CONFORM TO THE AMERICAN INSTITUTE OF STEEL CONSTRUCTION "SPECIFICATION FOR THE DESIGN, FABRICATION AND ERECTION OF STRUCTURAL STEEL FOR BUILDINGS".
4. STRUCTURAL AND MISCELLANEOUS STEEL SHALL CONFORM TO ASTM A36 STRUCTURAL STEEL UNLESS OTHERWISE INDICATED.
5. STEEL PIPE SHALL CONFORM TO ASTM A500 "COLD-FORMED WELDED & SEAMLESS CARBON STEEL STRUCTURAL TUBING", GRADE A, OR ASTM A53 PIPE STEEL BLACK AND HOT-DIPPED ZINC-COATED WELDED AND SEAMLESS TYPE E OR S, GRADE B. PIPE SIZES INDICATED ARE NOMINAL. ACTUAL OUTSIDE DIAMETER IS LARGER.
6. STRUCTURAL CONNECTION BOLTS SHALL BE HIGH STRENGTH BOLTS (BEARING TYPE) AND CONFORM TO ASTM A325 "HIGH STRENGTH BOLTS FOR STRUCTURAL JOINTS, INCLUDING SUITABLE NUTS AND PLAIN HARDENED WASHERS". ALL BOLTS SHALL BE 5/8" DIA UON.
7. ALL STEEL MATERIALS SHALL BE GALVANIZED AFTER FABRICATION IN ACCORDANCE WITH ASTM A123 "ZINC (HOT-DIP GALVANIZED) COATINGS ON IRON AND STEEL PRODUCTS", UNLESS OTHERWISE NOTED.
8. ALL BOLTS, ANCHORS AND MISCELLANEOUS HARDWARE SHALL BE GALVANIZED IN ACCORDANCE WITH ASTM A153 "ZINC- COATING (HOT-DIP) ON IRON AND STEEL HARDWARE", UNLESS OTHERWISE NOTED.
9. FIELD WELDS, DRILL HOLES, SAW CUTS AND ALL DAMAGED GALVANIZED SURFACES SHALL BE REPAIRED WITH AN ORGANIC ZINC REPAIR PAINT COMPLYING WITH REQUIREMENTS OF ASTM A780. GALVANIZING REPAIR PAINT SHALL HAVE 65 PERCENT ZINC BY WEIGHT, ZIRP BY DUNCAN GALVANIZING, GALVA BRIGHT PREMIUM BY CROWN OR EQUAL. THICKNESS OF APPLIED GALVANIZING REPAIR PAINT SHALL BE NOT NOT LESS THAN 4 COATS (ALLOW TIME TO DRY BETWEEN COATS) WITH A RESULTING COATING THICKNESS REQUIRED BY ASTM A123 OR A153 AS APPLICABLE.
10. CONTRACTOR SHALL COMPLY WITH AWS CODE FOR PROCEDURES, APPEARANCE AND QUALITY OF WELDS, AND FOR METHODS USED IN CORRECTING WELDING. ALL WELDERS AND WELDING PROCESSES SHALL BE QUALIFIED IN ACCORDANCE WITH AWS "STANDARD QUALIFICATION PROCEDURES". ALL WELDING SHALL BE DONE USING E70XX ELECTRODES AND WELDING SHALL CONFORM TO AISC AND D.I.I. WHERE FILLET WELD SIZES ARE NOT SHOWN, PROVIDE THE MINIMUM SIZE PER TABLE J2.4 IN THE AISC "MANUAL OF STEEL CONSTRUCTION". 9TH EDITION.
11. INCORRECTLY FABRICATED, DAMAGED OR OTHERWISE MISFITTING OR NONCONFORMING MATERIALS OR CONDITIONS SHALL BE REPORTED TO THE CONSTRUCTION MANAGER PRIOR TO REMEDIAL OR CORRECTIVE ACTION. ANY SUCH ACTION SHALL REQUIRE CONSTRUCTION MANAGER APPROVAL.
12. UNISTRUTS SHALL BE FORMED STEEL CHANNEL STRUT FRAMING AS MANUFACTURED BY UNISTRUT CORP, WAYNE, MI OR EQUAL. STRUT MEMBERS SHALL BE 1 5/8"x1 5/8"x12GA, UNLESS OTHERWISE NOTED, AND SHALL BE HOT-DIP GALVANIZED AFTER FABRICATION.
13. EPOXY ANCHOR ASSEMBLY SHALL CONSIST OF 1/2" DIAMETER STAINLESS STEEL ANCHOR ROD WITH NUTS & WASHERS. AN INTERNALLY THREADED INSERT, A SCREEN TUBE AND A EPOXY ADHESIVE. THE ANCHORING SYSTEM SHALL BE THE HILTI-HIT HY-20 AND OR HY-150 SYSTEMS (AS SPECIFIED AN DWG.) OR ENGINEERS APPROVED EQUAL WITH 4-1/4" MIN. EMBEDMENT DEPTH.
14. EXPANSION BOLTS SHALL CONFORM TO FEDERAL SPECIFICATION FF-S-325, GROUP II, TYPE 4, CLASS I, HILTI KWIK BOLT II OR APPROVED EQUAL. INSTALLATION SHALL BE IN ACCORDANCE WITH THE MANUFACTURER'S RECOMMENDATIONS. MINIMUM EMBEDMENT SHALL BE THREE AND ONE HALF (3 1/2) INCHES.
15. GRAVEL SUB BASE AND CONCRETE SHALL BE PLACED AGAINST UNDISTURBED SOIL.
16. CONCRETE FOR FENCE AND ICE BRIDGE SUPPORT SHALL BE 3000 PSI AIR ENTRAINED (4 %-6 %) NORMAL WEIGHT CONCRETE.
17. ALL CAST IN PLACE CONCRETE SHALL BE MIXED AND PLACED IN ACCORDANCE WITH THE REQUIREMENTS OF ACI 318 AND ACI 301.
18. THE FOLLOWING MINIMUM CONCRETE COVER OVER REINFORCING STEEL SHALL BE AS FOLLOWS UNO:
    CONCRETE CAST AGAINST EARTH ..... 3 INCHES.
    CONCRETE EXPOSED TO EARTH OR WATER
    #6 AND LARGER ..... 2 INCHES
    #5 AND SMALLER ..... 1 1/2 INCHES
    ALL EXPOSED EDGES SHALL BE PROVIDED WITH A 3/4"x3/4" CHAMFER UNLESS NOTED OTHERWISE.
19. LUMBER SHALL COMPLY WITH THE REQUIREMENTS OF THE AMERICAN INSTITUTE OF TIMBER CONSTRUCTION AND THE NATIONAL FOREST PRODUCTS ASSOCIATION'S NATIONAL DESIGN SPECIFICATION FOR WOOD CONSTRUCTION. ALL LUMBER SHALL BE PRESSURE TREATED AND SHALL BE STRUCTURAL GRADE NO. 2 OR BETTER.

T-MOBILE NORTHEAST LLC
15 COMMERCE WAY, SUITE B
NORTON, MA 02766
OFFICE: (508) 286-2700
FAX: (508) 286-2893

CHAPPELL ENGINEERING ASSOCIATES, LLC
Civil · Structural · Land Surveying
R.K. EXECUTIVE CENTRE
201 BOSTON POST ROAD WEST
SUITE 101
MARLBOROUGH, MA 01752
(508)481-7400
www.chappellengineering.com

STATE OF MAINE
CLEMENT J. SALEK
No. 11793
LICENSED PROFESSIONAL ENGINEER

Reviewed for Code Compliance
Inspectional Services
Town of Hingham, Massachusetts
Date: 08/15/17

APPROVALS

LANDLORD _____
LEASING _____
R.F. _____
ZONING _____
CONSTRUCTION _____
A/E _____

PROJECT NO: 4PB-1288-A

DRAWN BY: CMC

CHECKED BY: JMF

SUBMITTALS

3	08/10/17	CONSTRUCTION FINAL
2	05/16/17	CONSTRUCTION FINAL
1	03/15/17	CONSTRUCTION
0	03/30/15	ISSUED FOR REVIEW

THIS DOCUMENT IS THE CREATION, DESIGN, PROPERTY AND COPYRIGHTED WORK OF T-MOBILE NORTHEAST, LLC. ANY DUPLICATION OR USE WITHOUT EXPRESS WRITTEN CONSENT IS STRICTLY PROHIBITED. DUPLICATION AND USE BY GOVERNMENT AGENCIES FOR THE PURPOSES OF CONDUCTING THEIR LAWFULLY AUTHORIZED REGULATORY AND ADMINISTRATIVE FUNCTIONS IS SPECIFICALLY ALLOWED.

4PB-1288-A

WGME INC.

81 NORTHPORT DRIVE
PORTLAND, ME 04103

SHEET TITLE

STRUCTURAL NOTES, PLANS, SECTIONS & DETAILS

SHEET NUMBER

S-1

CEA JOB NO.: 1632.011