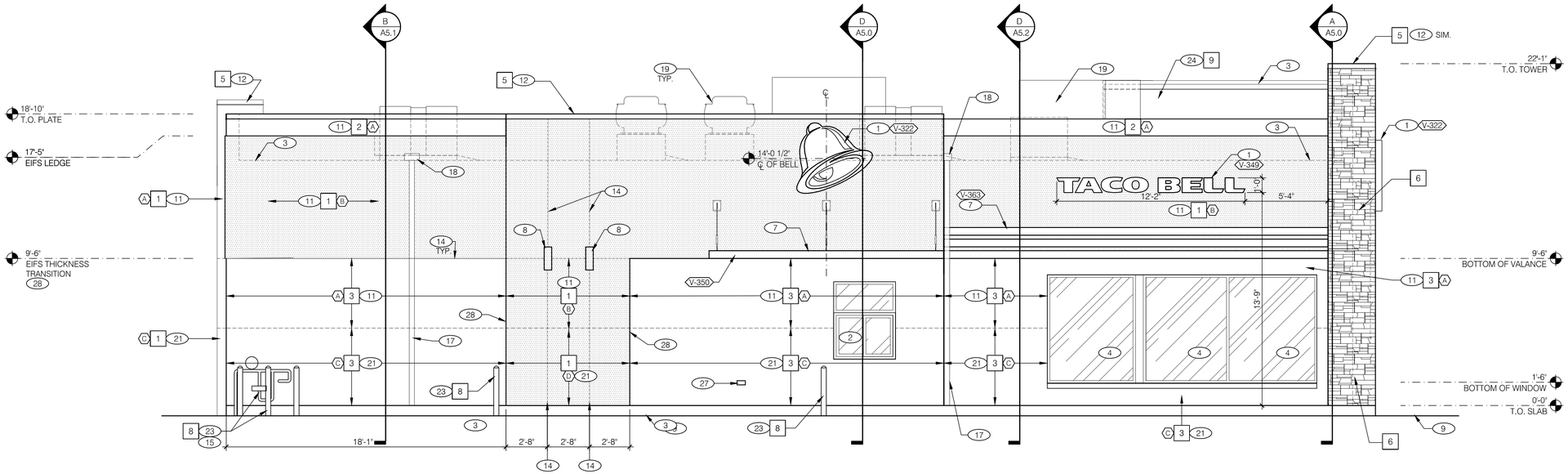

LEFT SIDE ELEVATION 1/4"=1'-0" **A**

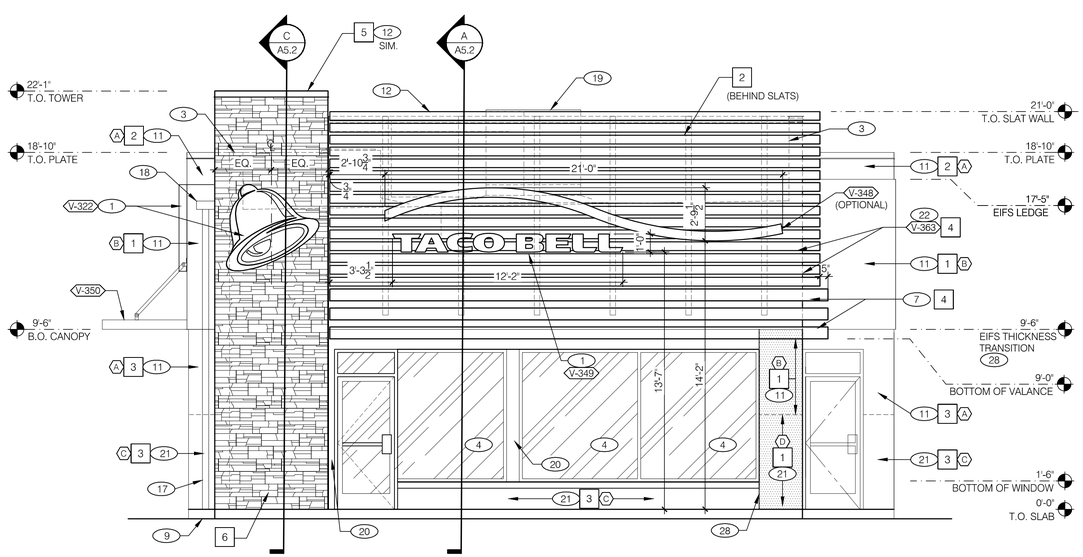

FRONT ELEVATION 1/4" = 1'-0" **C**

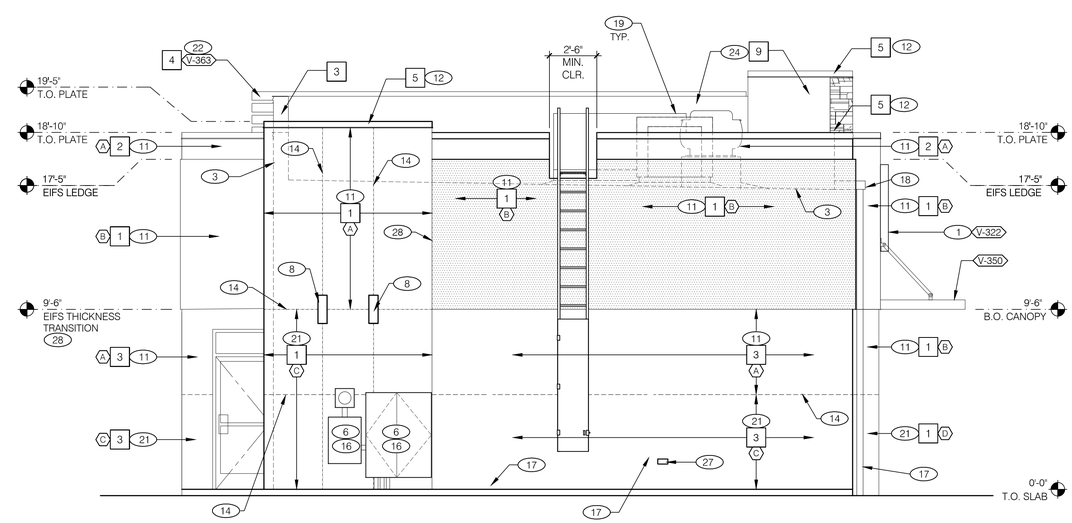

REAR ELEVATION 1/4" = 1'-0" **B**

MARK D. MCCLUGGAGE AIA, CCS
1525 E. Douglas Wichita, KS 67211
Tel: (316) 265-8367
Fax: (316) 265-8445
www.gbrv.com
MAINE LIC. # ARC-2323

15034.000

CONTRACT DATE:	07.06.2016
BUILDING TYPE:	CONVERSION
PLAN VERSION:	FEBRUARY 2015
SITE NUMBER:	XXX-XXX
STORE NUMBER:	XXXXX

TACO BELL

1363 WASHINGTON AVE.
PORTLAND, ME

CONVERSION
LIVE MAS - MEDIUM40

EXTERIOR ELEVATIONS

A4.1

PLOT DATE: