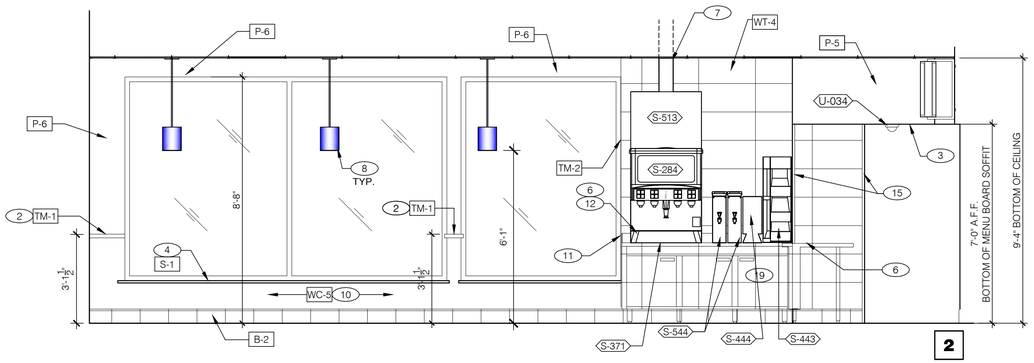

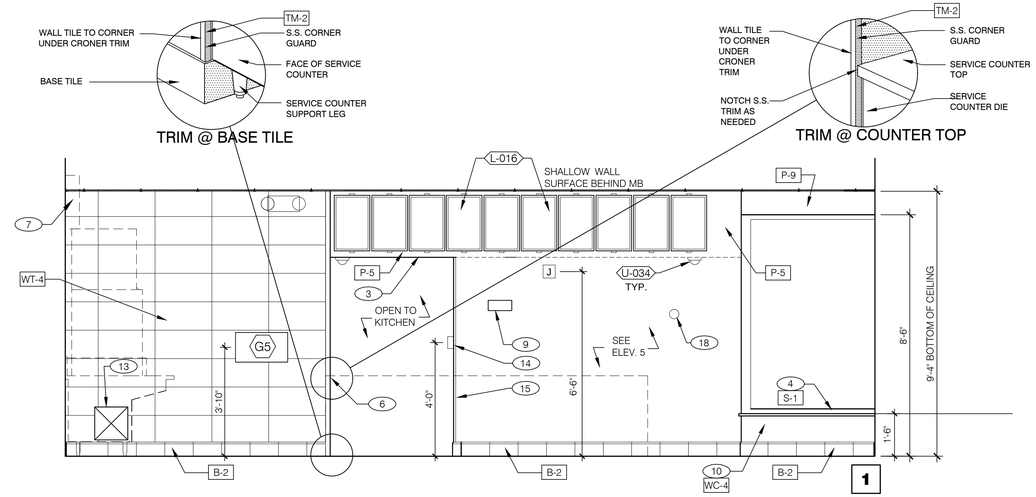

DINING 3/8"=1'-0"

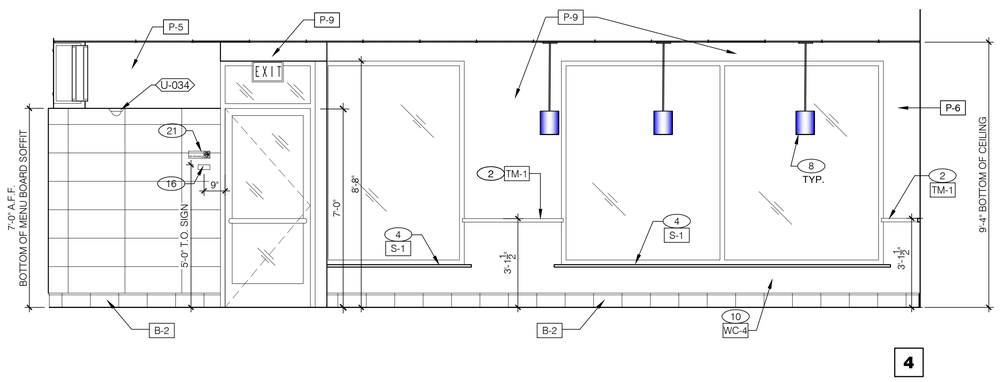

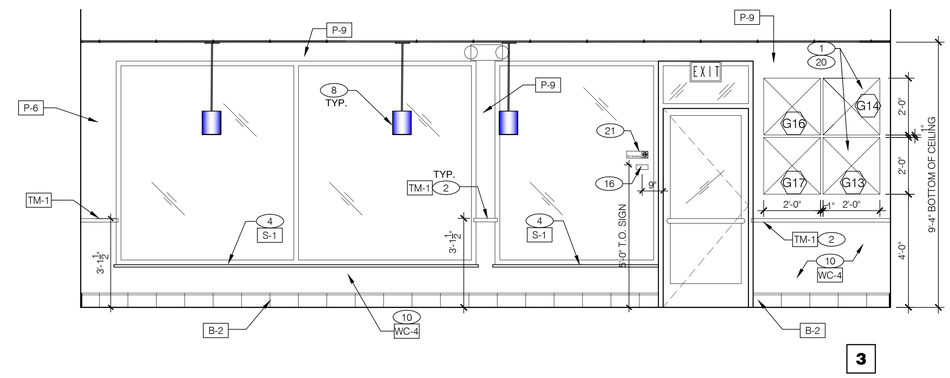

DINING 3/8"=1'-0"

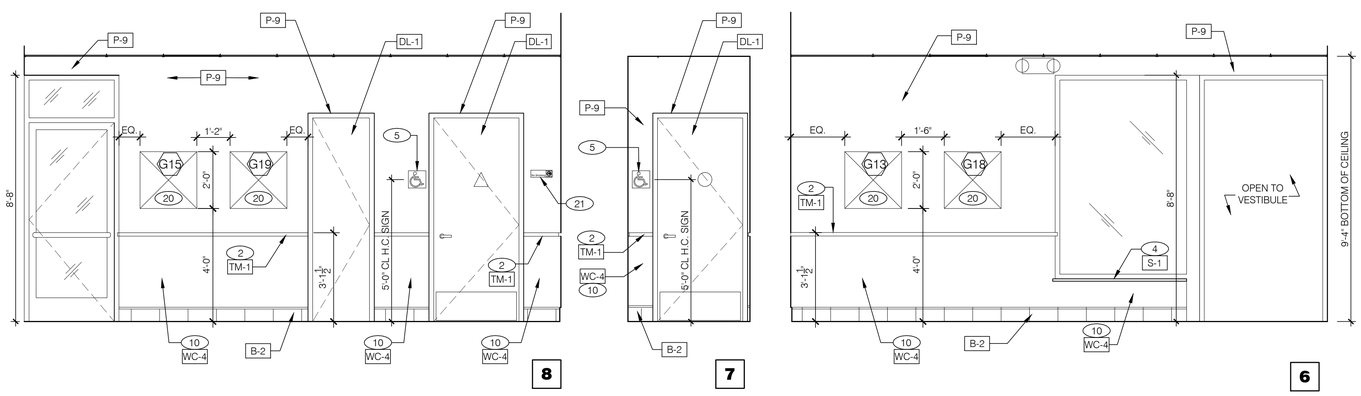

PASSAGE 3/8"=1'-0"

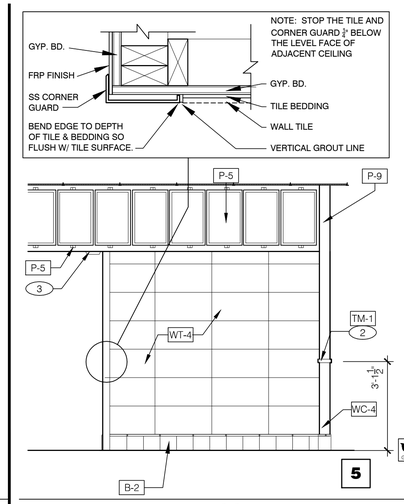

TILE BEHIND COUNTER 3/8"=1'-0"

1. FOR ARTWORK DESCRIPTION, REFER TO ARTWORK SCHEDULE ON SHEET A2.0.
2. CHAIR RAIL. REFER TO DETAIL 18/A6.3.
3. MENUBOARD BULKHEAD.
4. WINDOW SILL.
5. H.C. SIGNAGE
6. PROVIDE CLEAR SILICONE CAULK WHERE ALL FIXED AND BUILT-IN COUNTERS / EQUIPMENT ABUT WALL SURFACES. WHERE GAP BETWEEN WALL AND COUNTER SPLASH / EQUIPMENT EXCEEDS 1/4", PROVIDE S.S. CLOSURE ANGLE.
7. 6" X6" 18 GAUGE STAINLESS STEEL CHASE.
8. DROP PENDANT LIGHT FIXTURE. SEE SCOPE OF WORK AND SHEET E4.0.
9. "PLEASE ASK IF YOU NEED ASSISTANCE" SIGN. SMALLWARE PACKAGE.
10. REFER TO 13, 14 & 17/A6.3 FOR WAINSCOT INSTALLATION.
11. START CHAIR RAIL. SEE SHT. A1.0 FOR DIMENSIONS.
12. OMIT CHAIR RAIL BEHIND DRINK STATION.
13. OPENING FINISHED WITH FRP FOR SYRUP TUBES. SEE 11/A6.4 AND SHEET A1.0.
14. SECURITY SYSTEM KEYPAD, SEE E5.0.
15. SS CORNER/ END WALL CHANNEL GUARD, FULL HEIGHT. SEE 19/A6.3 & 5/A8.0.
16. INSTALL TACTILE "EXIT" SIGN AT 5'-0" TO TOP.
17. NOT USED.
18. TEMPERATURE SENSOR. SEE MECHANICAL DRAWINGS.
19. BOTTOM OF BEVERAGE AND ICE DISPENSING LEVERS SHALL BE NO HIGHER THAN 42" A.F.F.
20. 24"x24" ART PANELS.
21. NO SMOKING SIGN.

KEY NOTES A

MARK D. MCCLUGGAGE AIA, CCS
1525 E. Douglas Wichita, KS 67211
Tel: (316) 265-5387
Fax: (316) 265-5484
www.gbinc.com
MAINE LIC. # ARC-2323

LICENSED ARCHITECT
MARK D. McCLUGGAGE
No. AN2323
STATE OF MAINE

07/14/16

15034.000

CONTRACT DATE:	07.06.2016
BUILDING TYPE:	CONVERSION
PLAN VERSION:	FEBRUARY 2015
SITE NUMBER:	XXX-XXX
STORE NUMBER:	XXXXX

TACO BELL

1363 WASHINGTON AVE.
PORTLAND, ME

CONVERSION
LIVE MAS - MEDIUM40
BOLD

INTERIOR ELEVATIONS DINING ROOM

A8.0

PLOT DATE: