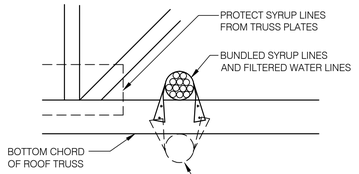

SYRUP LINE IN CEILING N.T.S. **17**

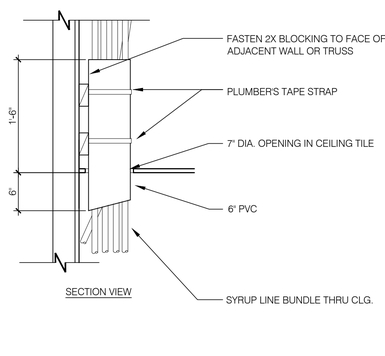

SYRUP BUNDLE CLG. PENETRATION N.T.S. **18**

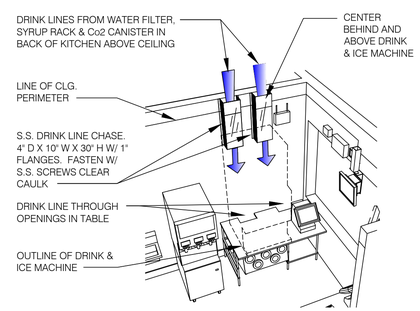

NOTE: SEE DETAIL 11/P6.0 DRINK SYSTEM SCHEMATIC & DETAIL 12/P6.0 FOR DRINK LINES

SYRUP CHASE ON WALL N.T.S. **19**

NOT USED N.T.S. **20**

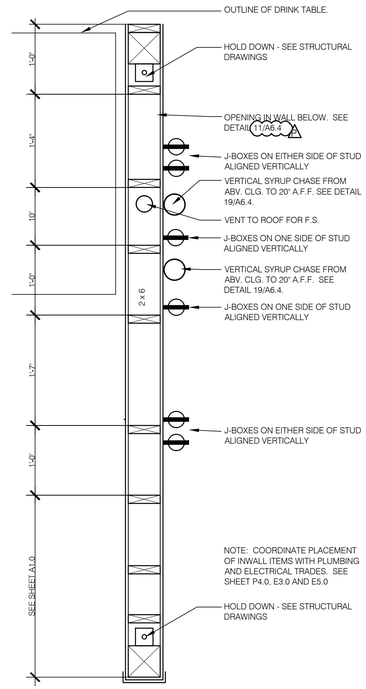

INTERIOR CHASE WALL N.T.S. **14**

NOT USED N.T.S. **15**

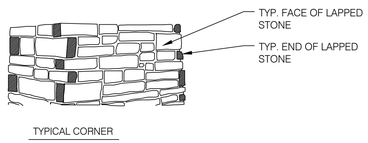

NOTE:
THE TYPICAL CORNER TREATMENT FOR STONE VENEER IS SHOWN ABOVE. ALTERNATE LAPPING STONES AS SHOWN ABOVE.

FIELD STONE SHALL HAVE HORIZONTAL GROUT LINE ALIGNED WITH THE FINISH FLOOR. HORIZONTAL GROUT JOINTS SHOULD NOT EXCEED 4 TO 6 FEET.

ALTERNATE

TYPICAL STONE VENEER CORNER N.T.S. **16**

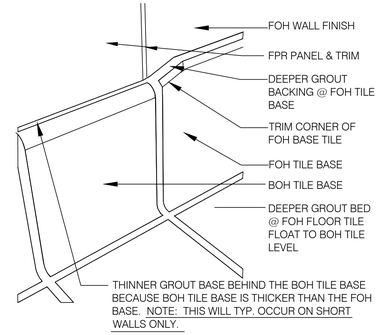

TILE BASE TRANSITION **9**

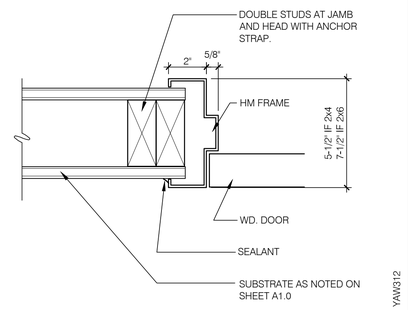

JAMB @ H.M. DOOR 3" = 1'-0" **10**

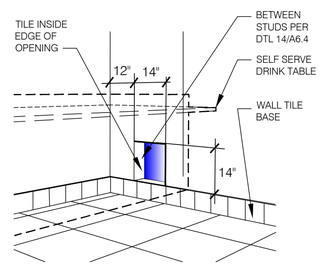

WALL PASS THRU NTS **11**

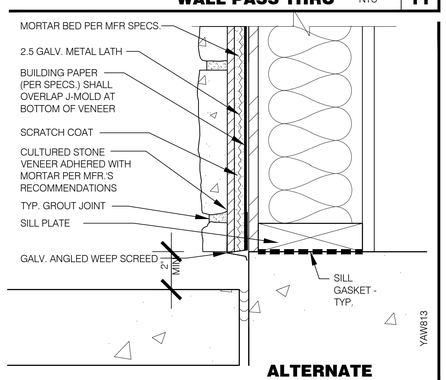

ALTERNATE

STONE WAINSCOT @ TOWER LEG 3"=1'-0" **12**

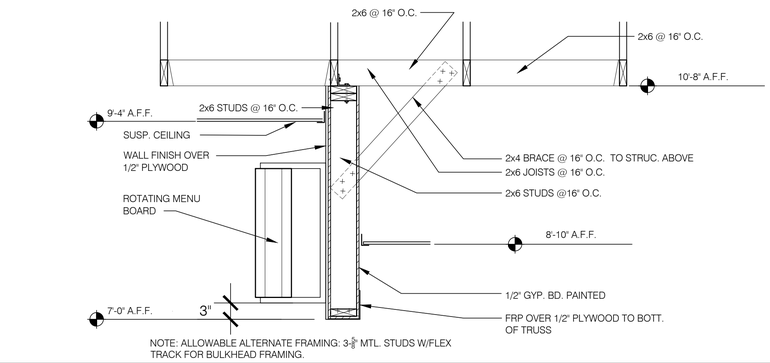

MENU BOARD/SOFFIT SECTION 3/4" = 1'-0" **1**

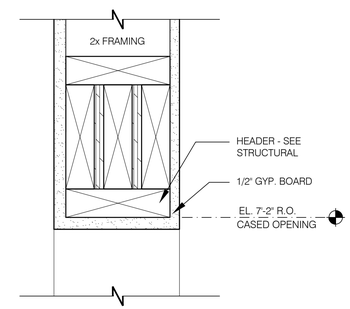

CASED OPENING DETAIL 3" = 1'-0" **6**

NOT USED N.T.S. **7**

NOT USED N.T.S. **2**

NOT USED N.T.S. **3**

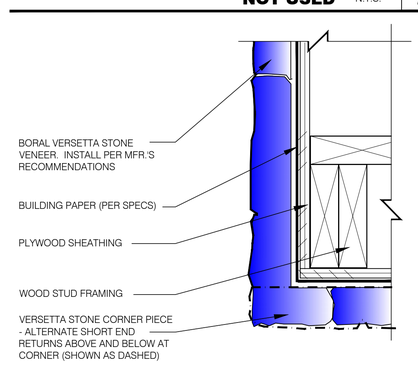

STONE VENEER OUTSIDE CORNER 3" = 1'-0" **8**

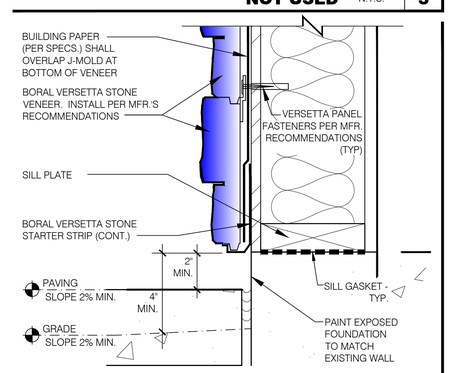

STONE WAINSCOT @ TOWER LEG 3" = 1'-0" **4**

MARK D. MCCLUGGAGE AIA, CCS
1525 E. Douglas Wichita, KS 67211
Phone: (316) 265-5900
Fax: (316) 265-5646
www.dimx.com
MAINE LIC. # ARCH-2323

LICENSED ARCHITECT
MARK D. McCLUGGAGE
No. AN2323
STATE OF MAINE

07/14/16

15034.000

CONTRACT DATE:	07.06.2016
BUILDING TYPE:	CONVERSION
PLAN VERSION:	FEBRUARY 2015
SITE NUMBER:	XXX-XXX
STORE NUMBER:	XXXXX

TACO BELL

1363 WASHINGTON AVE.
PORTLAND, ME

TACO BELL
CONVERSION
LIVE MAS - MEDIUM40

CONSTRUCTION DETAILS INTERIOR

A6.4

PLOT DATE: