NOT USED | 17

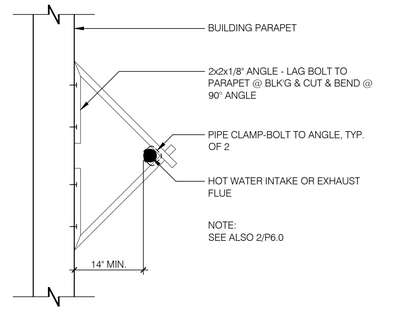

W.H. FLU / INTAKE PIPE SUPPORT N.T.S. | 13

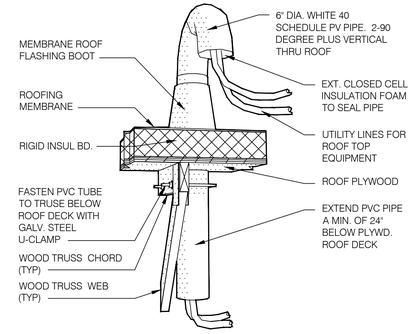

PIPE HOOD N.T.S. | 9

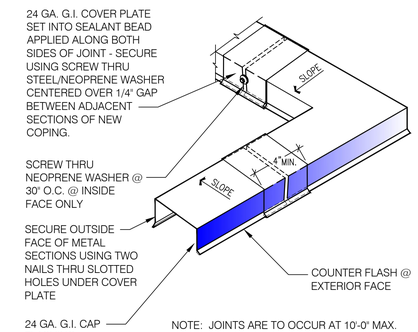

NOTE: JOINTS ARE TO OCCUR AT 10'-0" MAX.

COPING JOINT N.T.S. | 5

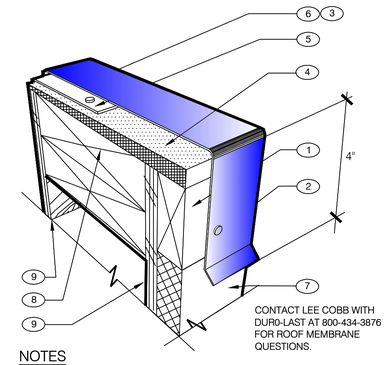

NOTES

1. PROVIDE A WOOD NAILER TO MATCH THE THICKNESS OF THE WALL FINISH. APRROX. 1" THICK IS TYPICAL BUT MAY VARY. TOP OF WOOD NAILER SHALL BE FLUSH WITH TOP OF WALL FINISH. THE WOOD NAILER SHALL EXTEND AT LEAST 1/2" INCH BEYOND THE LOWER HORIZONTAL EDGE OF THE PARAPET COPING TO ALLOW FOR PROPER FASTENING.
2. FASTENERS USED TO ATTACH THE COPING TO WOOD NAILERS, MUST BE SPACED NO GREATER THAN 18 - INCHES ON-CENTER.
3. ALLOW FOR 1/8 - INCH EXPANSION GAP BETWEEN 10-FOOT LENGTHS OF COPING. PROVIDE A COPING JOINT COVERS BETWEEN ENDS OF COPING PIECES AND AT CORNERS. JOINT COVERS SHOULD BE MADE FROM THE SAME MATERIAL AS THE COPING AND SHOULD LAP THE JOINTS A MINIMUM OF 6" ON EITHER SIDE. JOINT COVERS SHALL BE FASTENED THE SAME WAY AS THE COPING.
4. FIBER CANT STRIP SLOPED 1/4:12 TOWARDS ROOF..
5. ROOF MEMBRANE
6. FACTORY PAINTED 24 GAUGE METAL COPING WITH 4" DROP FRONT, BACK AND ENDS (WHERE SHOWN).
7. WALL FINISH: TYPICALLY 1" THK EIFS OR 7/8" THK STUCCO
8. DOUBLE 2X TOP PLATE
9. PLYWOOD SUBSTRATE. SEE SHEET A1.0 & S2.0 FOR ADDITIONAL DETAILS

PARAPET CAP N.T.S. | 2

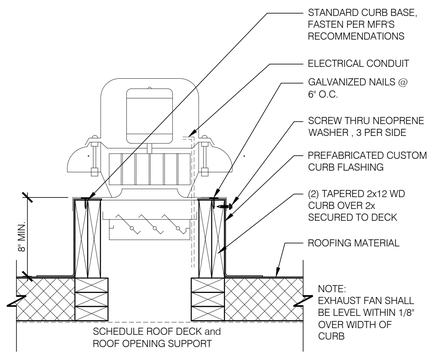

EXHAUST FAN CURB 1-1/2" = 1'-0" | 18

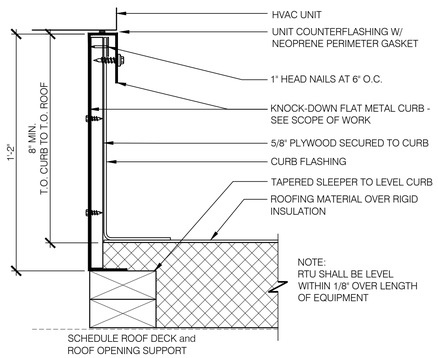

HVAC CURB 3"=1'-0" | 14

NOT USED | 10

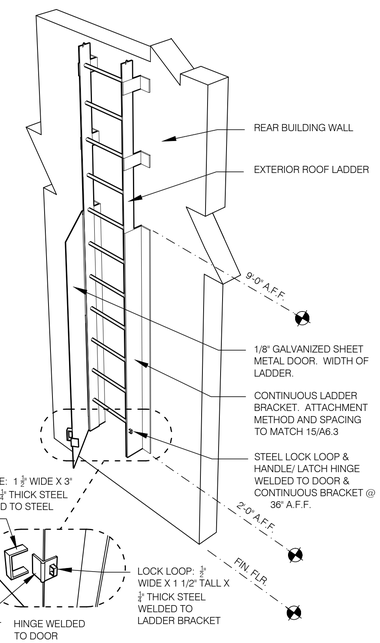

LOCK LATCH & HANDLE BLOW-UP

NOTE: SEE DETAIL 15/A6.3 FOR MAIN DETAIL FOR THE EXTERIOR ROOF LADDER.

SECURITY GATE DETAIL N.T.S. | 7

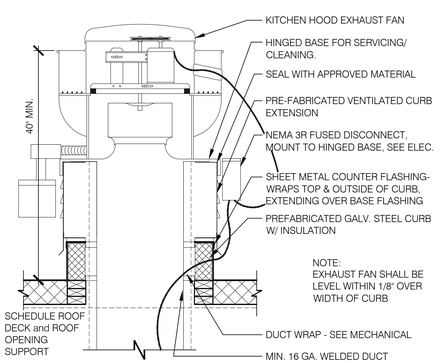

EXHAUST FAN CURB N.T.S. | 19

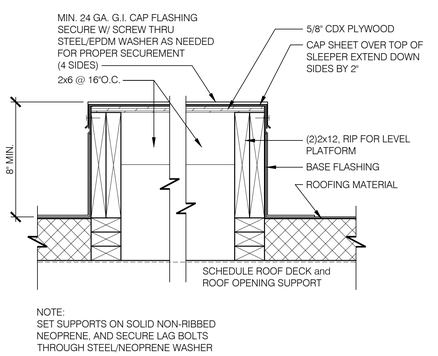

SLEEPER SUPPORT 1-1/2"=1'-0" | 15

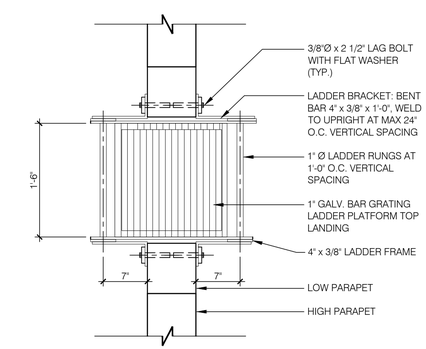

ROOF LADDER 1"=1'-0" | 11

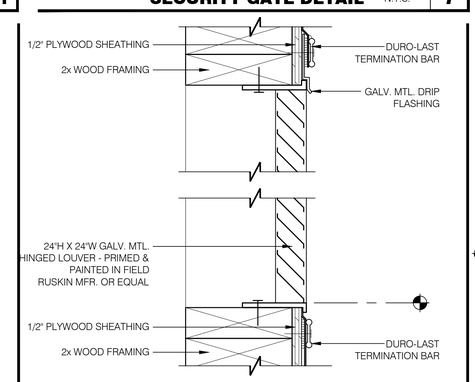

LOUVER DETAIL N.T.S. | 8

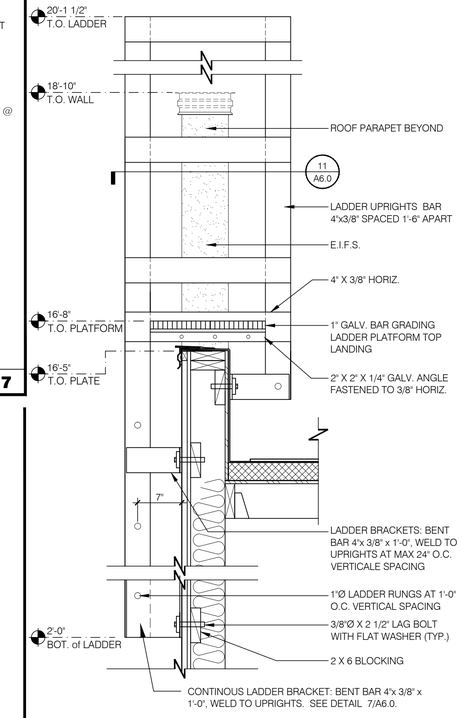

NOTE: SEE DETAIL 7/A6.0 FOR THE LADDER SECURITY DOOR.

ROOF LADDER N.T.S. | 4

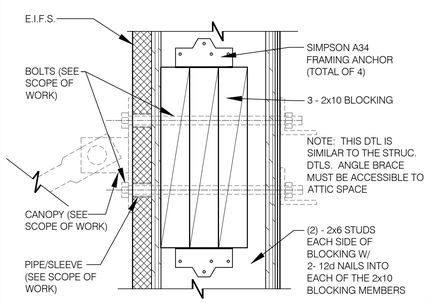

CANOPY BLOCKING DETAIL 3" = 1'-0" | 20

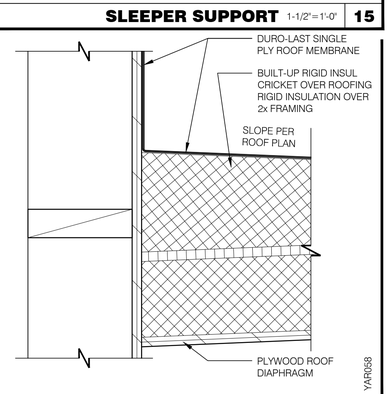

CRICKET 3"=1'-0" | 16

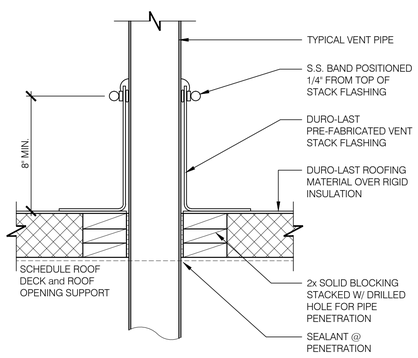

SEALED PIPE FLASHING 1 1/2"=1'-0" | 12

MARK D. MCCLUGGAGE AIA, CCS
1525 E. Douglas Wichita, KS 67211
Tel: (316) 265-5367
Fax: (316) 265-5368
www.gfmv.com
MAINE LIC. # ARC-2323

LICENSED ARCHITECT
MARK D. McCLUGGAGE
No. AN2323
STATE OF MAINE

07/14/16

15034.000

CONTRACT DATE:	07.06.2016
BUILDING TYPE:	CONVERSION
PLAN VERSION:	FEBRUARY 2015
SITE NUMBER:	XXX-XXX
STORE NUMBER:	XXXXX

TACO BELL

1363 WASHINGTON AVE.
PORTLAND, ME

TACO BELL
CONVERSION
LIVE MAS - MEDIUM40

CONSTRUCTION DETAILS ROOF

A6.0

PLOT DATE: