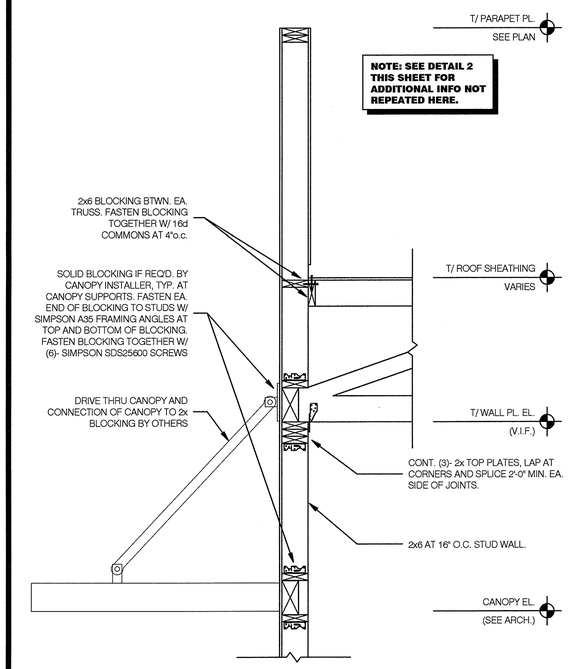

SECTION 3/4" = 1'-0" | **11**

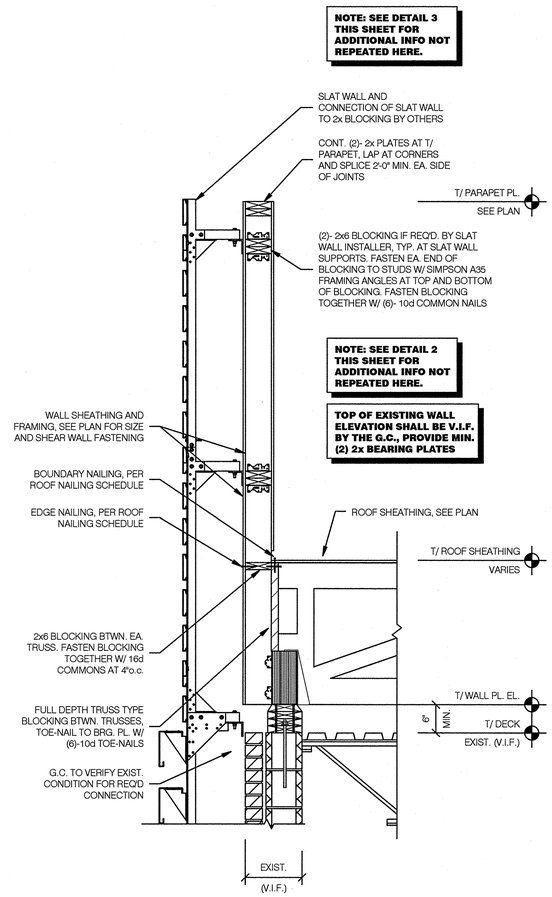

SECTION 3/4" = 1'-0" | **8**

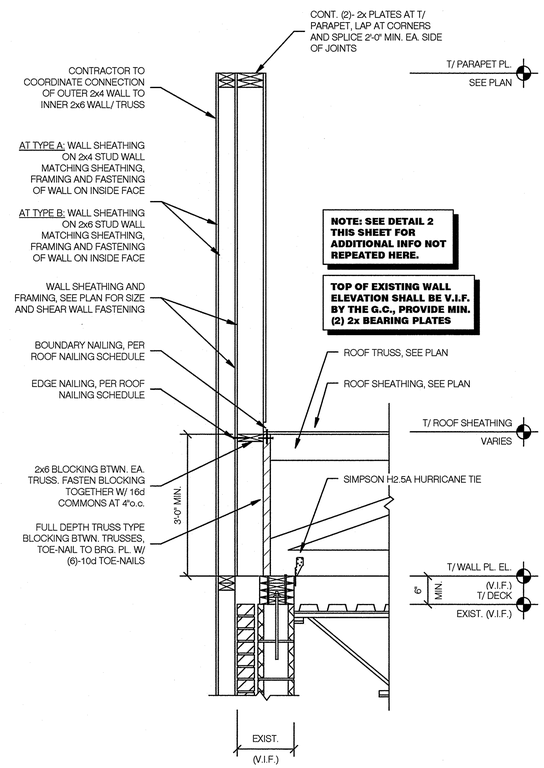

SECTION 3/4" = 1'-0" | **5**

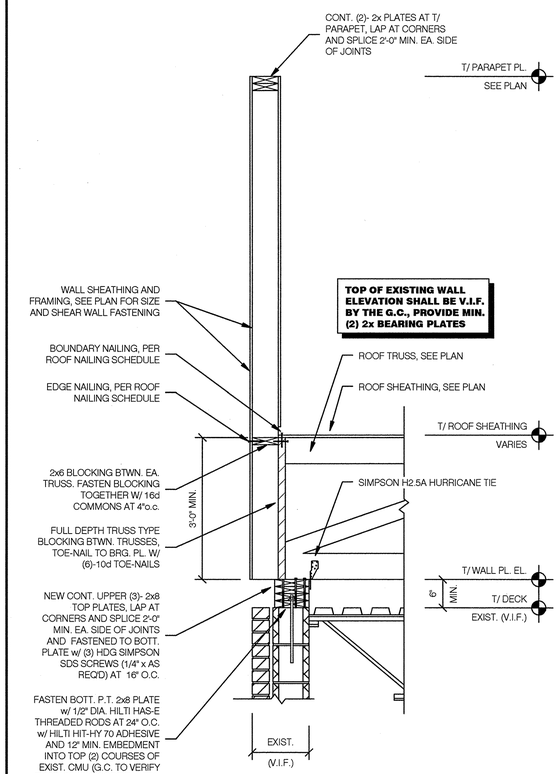

SECTION 3/4" = 1'-0" | **2**

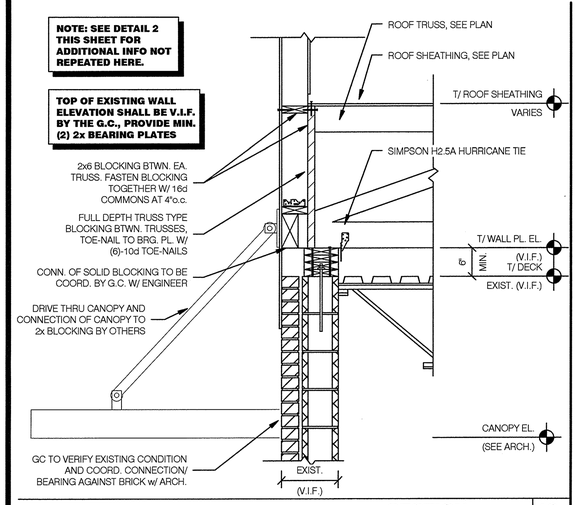

SECTION NO SCALE | **12**

NOT USED NO SCALE | **9**

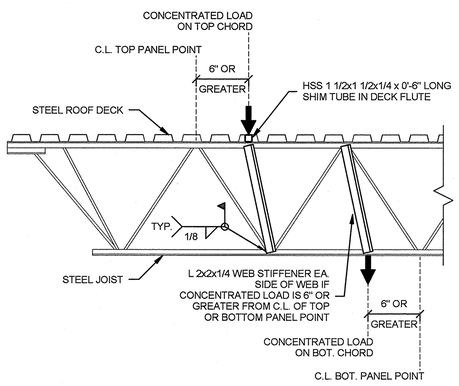

NOTES:
1. PROVIDE WEB STIFFENER BETWEEN THE CHORD WHERE THE CONCENTRATED LOAD IS APPLIED AND THE PANEL POINT OF THE OPPOSITE CHORD WHEN A CONCENTRATED LOAD IS TO BE PLACED ON THE JOIST 6" OR MORE AWAY FROM A PANEL POINT.
2. WHEN PIPES/ CONDUITS ARE LESS THAN 4" IN DIA. AND NOT BUNDLED, JOIST REINFORCEMENT IS NOT REQUIRED UNLESS OTHERWISE NOTED ON PLAN.

TYPICAL JOIST CONCENTRATED LOAD DETAIL 3/4" = 1'-0" | **6**

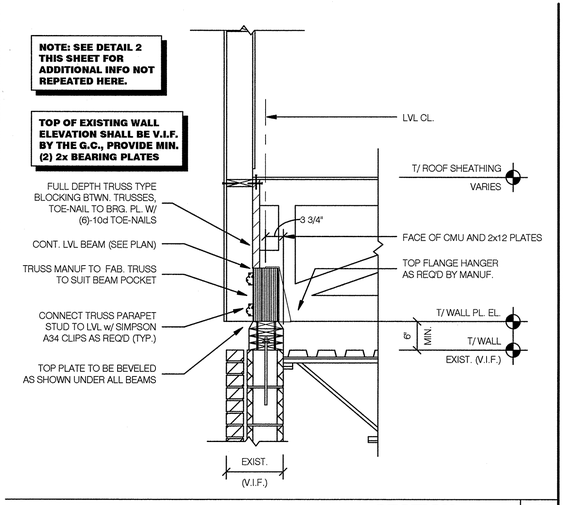

SECTION 3/4" = 1'-0" | **3**

MARK D. MCCLUGGAGE AIA, CCS
1635 E. Douglas Wichita, KS 67211
Tel: (316) 265-9367
Fax: (316) 265-6046
www.tem-inc.com
MAINE LIC. # ARC-3233

TEM STRUCTURAL Engineers
48 Constitution Drive
Bedford, NH 03110
Phone #: (603) 472-4488
Fax #: (603) 472-2817
www.tem-inc.com
TEM Project #: 47216.00

Copyright 2015 by Thomas E. Mann, Inc. (TEM)
These plans and specifications are copyrighted and may not be reproduced, copied, or used in whole or in part without written permission of TEM. Reuse or reproduction of any of the information contained in these plans and specifications without the prior written permission of TEM is prohibited and will be subject to legal action.

STATE OF MAINE
Thomas E. Lamb
13400
LICENSED PROFESSIONAL ENGINEER
7/15/16

15034.000

CONTRACT DATE:	07.15.2016
BUILDING TYPE:	CONVERSION
PLAN VERSION:	FEBRUARY 2015
SITE NUMBER:	XXX-XXX
STORE NUMBER:	XXXXX

TACO BELL

1363 WASHINGTON AVE.
PORTLAND, ME

TACO BELL

CONVERSION
LIVE MAS - MEDIUM40

FRAMING SECTIONS

S2.2

PLOT DATE: 07/15/16