GENERAL NOTES:

1. All work shall be in accordance with IRC 2009, IBC 2009, NFPA-70 National Electric Code, Maine State Plumbing Code, ASHRAE, U.L., NFPA Codes and all local, State and Federal requirements.

2. All applicable Federal, State and Municipal regulations shall be followed, including the Federal Department of Labor Occupational Safety and Health act.

3. All required City and State permits must be obtained before any construction begins.

4. It is the contractor's sole responsibility to determine erection procedures and sequence to ensure the safety of the people working on the building and its components during erection. This includes the addition of necessary shoring, sheeting, temporary bracing, guys or tie-downs. Such material shall remain the property of the contractor after completion of the project.

5. Structural, Mechanical, Electrical and Plumbing design and installation by others shall be performed in accordance with local, State and Federal standards.

6. All fire ratings indicated shall be continuous to underside of fire rated ceiling or underside of roof deck. Seal all openings & mechanical penetrations with approved fire safing material.

7. Building shall have approved smoke detectors in accordance with NFPA-101 Life Safety Code and local authority having jurisdiction. Smoke detectors shall initiate alarm that is audible in the sleeping rooms of each unit as approved by authorities having jurisdiction.

8. Portable fire extinguishers shall be provided in all hazardous areas in accordance to NFPA-101. Local authority having jurisdiction needs to provide written requirements.

9. Balconies must maintain a 42" guardrail height and shall be kept free and clear of ice and snow at all times to ensure the second means of egress.

10. HVAC installation to be in accordance with ASHRAE, NFPA-90A, OR NFPA-90B and all federal, local and State codes. Ventilation or heat equipment shall be in accordance with NFPA-91, NFPA-211, NFPA-31, NFPA-54 and NFPA-70 as applicable.

11. HVAC & Electrical design to be design build by contractor.

12. Building layout to be sited by others on the building lot.

13. Stamped plans are for the use of Lot 23 Basket Lane Portland, Maine and may only be used once in this location.

14. Establishing the location of the building, on the site is the responsibility of the contractor and not indicated as part of this drawing set.

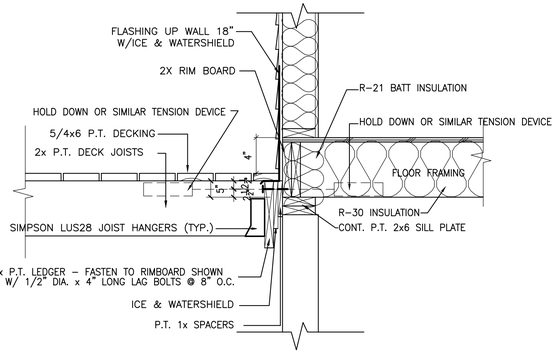

1 DECK /JOIST CONNECTION DETAIL

SCALE: 1"=1'-0

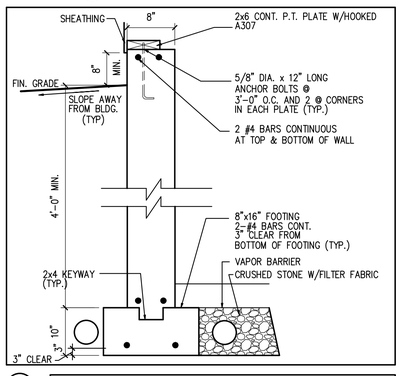

2 TYPICAL FOUNDATION WALL

SCALE: 1"=1'-0

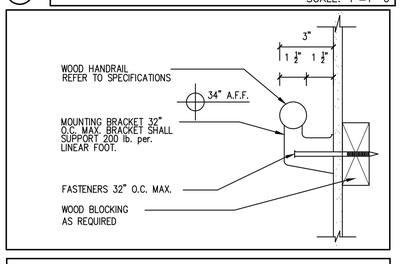

HANDRAIL DETAIL NTS

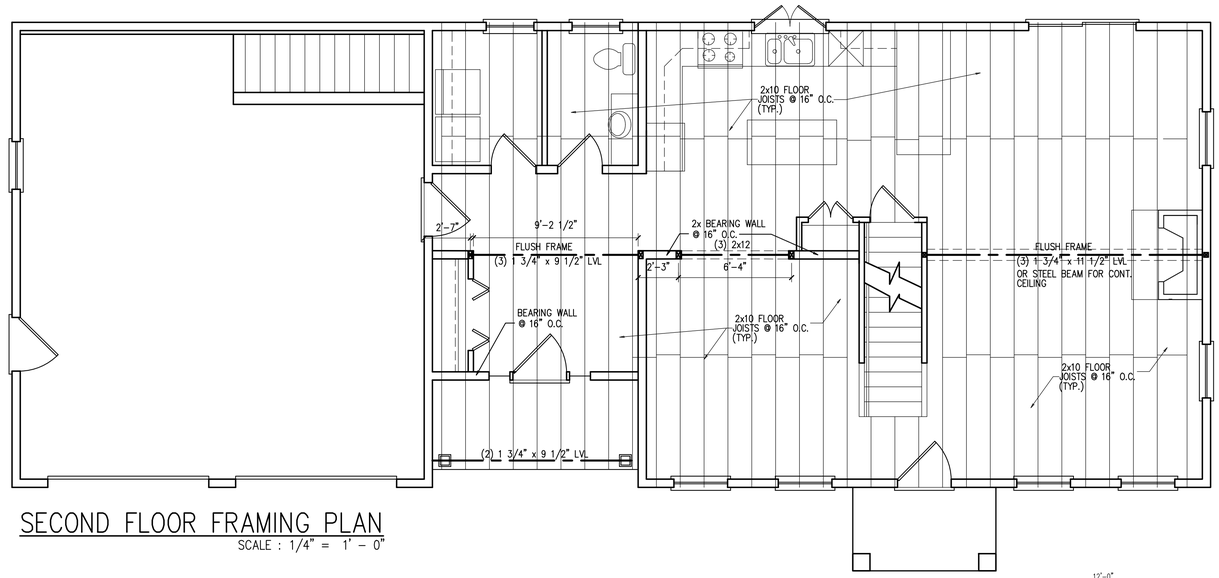

SECOND FLOOR FRAMING PLAN

SCALE : 1/4" = 1' - 0"

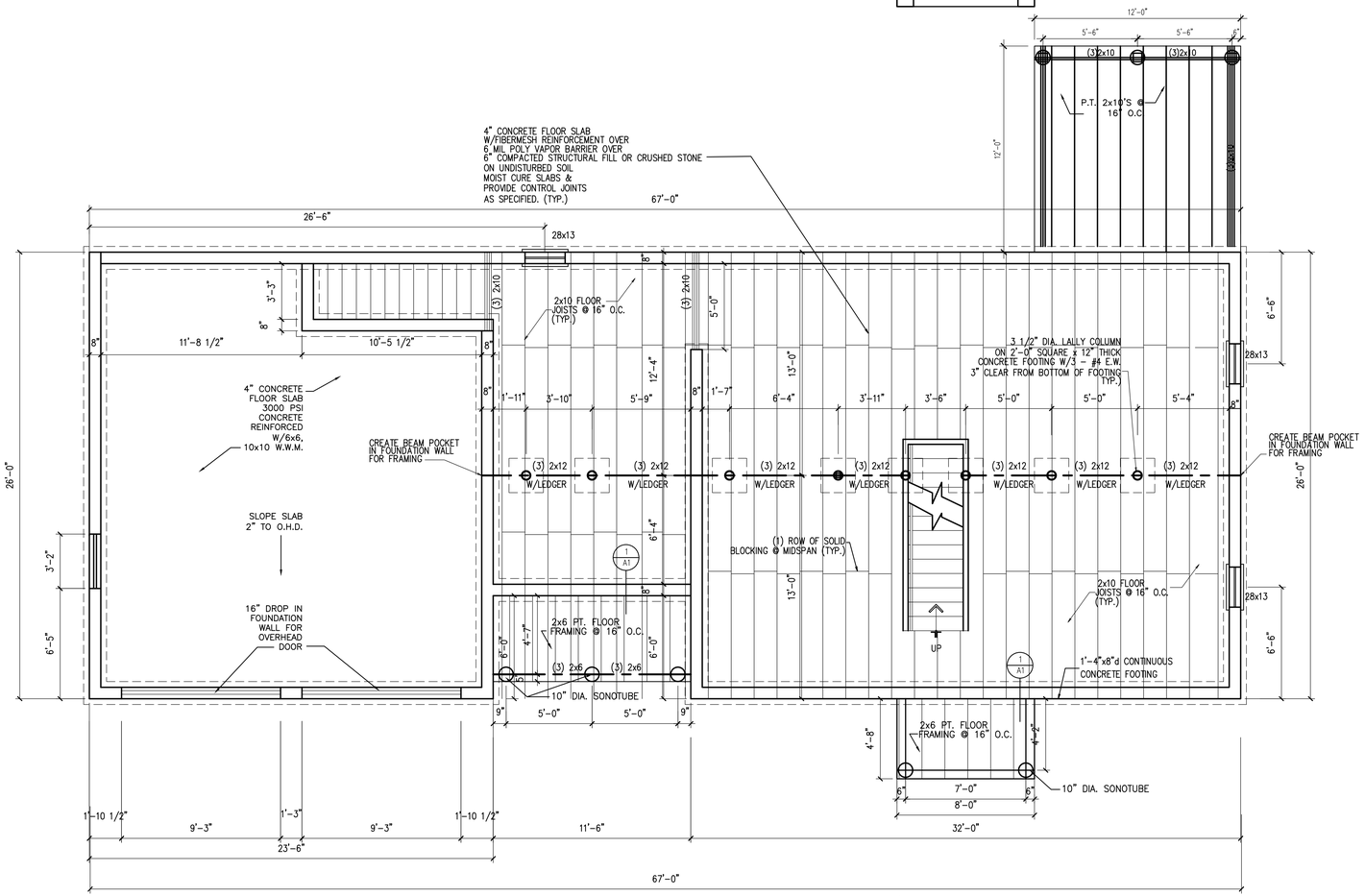

FOUNDATION / FIRST FLOOR FRAMING PLAN

SCALE : 1/4" = 1' - 0"

LICENSED ARCHITECT DAVID P. DOUGLASS NO. 3000 STATE OF MAINE

PAPE RESIDENCE
LOT 23
BASKET LANE
PORTLAND, MAINE

DRAWINGS THIS SHEET

FOUNDATION PLAN
FRAMING PLAN
NOTES/DETAILS

DATE 07/08/16

A1