Date: 03/21/18

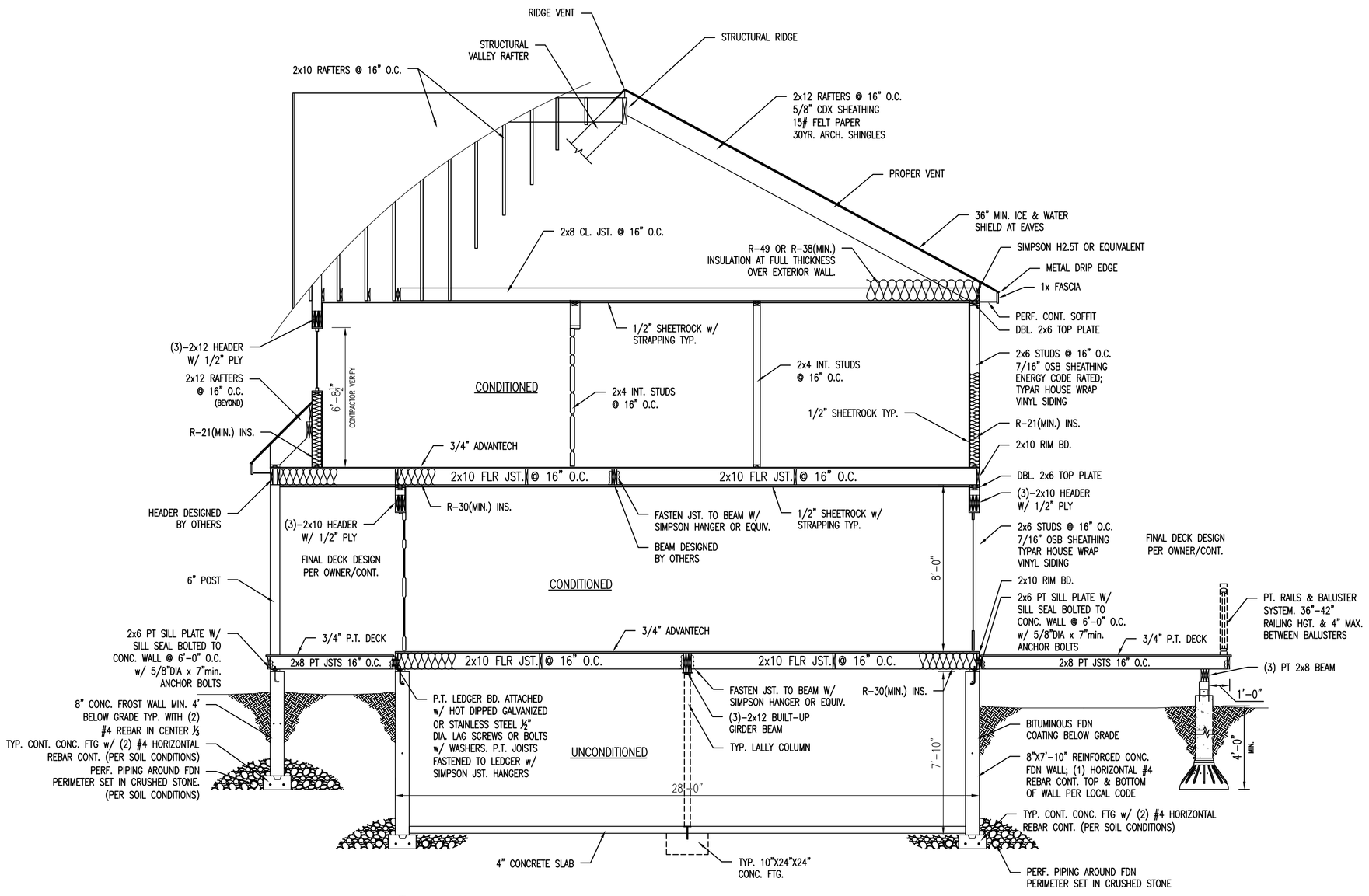

S-1
1/4" = 1'-0"

CONSTRUCTION NOTE:

CONTRACTOR IS TO VERIFY GRADE AND ALL DIMENSIONS IN FIELD BEFORE CONSTRUCTION. SECTION SHOWN MAY DIFFER FROM ACTUAL FINISHED CONSTRUCTION. FINAL MATERIALS, WINDOW/DOOR LOCATIONS AND SIZES, TO BE DETERMINED PER OWNER/CONT. SITE CONDITIONS; AND OR LOCAL CODES.

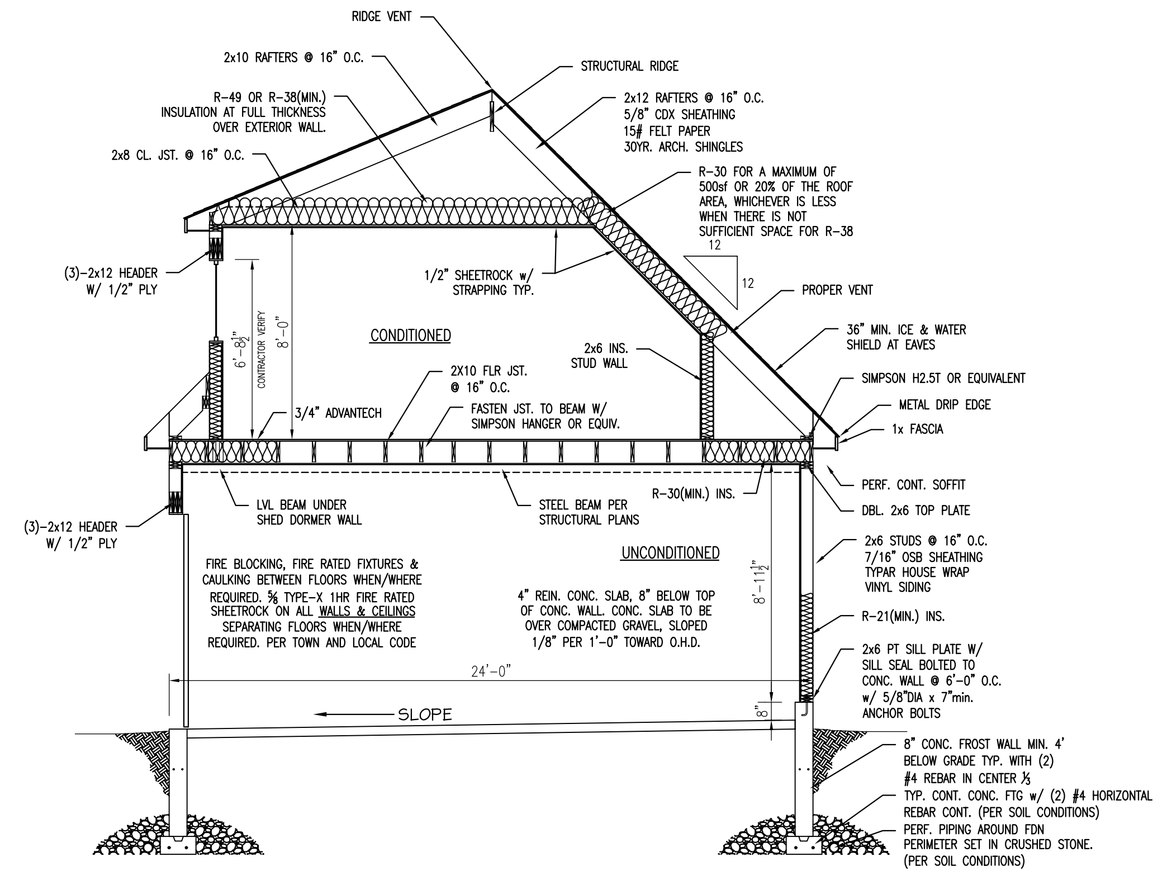

S-2
1/4" = 1'-0"

CONSTRUCTION NOTE:

CONTRACTOR IS TO VERIFY GRADE AND ALL DIMENSIONS IN FIELD BEFORE CONSTRUCTION. SECTION SHOWN MAY DIFFER FROM ACTUAL FINISHED CONSTRUCTION. FINAL MATERIALS, WINDOW/DOOR LOCATIONS AND SIZES, TO BE DETERMINED PER OWNER/CONT. SITE CONDITIONS; AND OR LOCAL CODES.

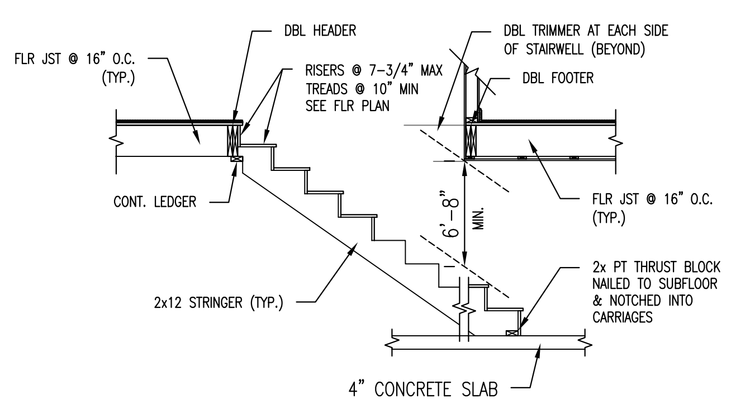

TYPICAL STAIR FRAMING
N.T.S.

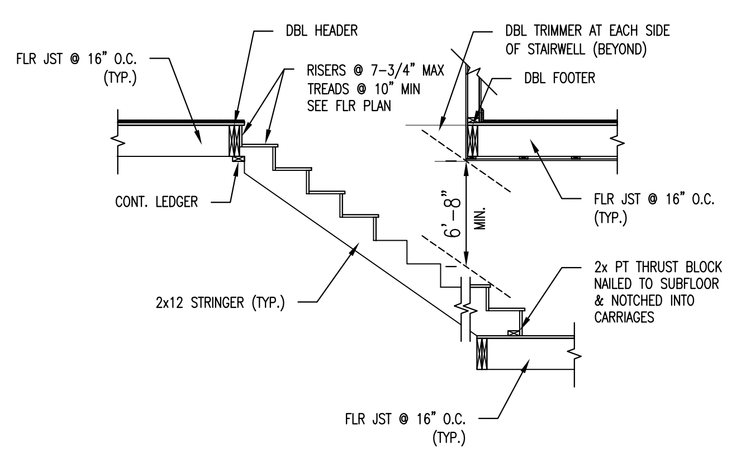

TYPICAL STAIR FRAMING
N.T.S.

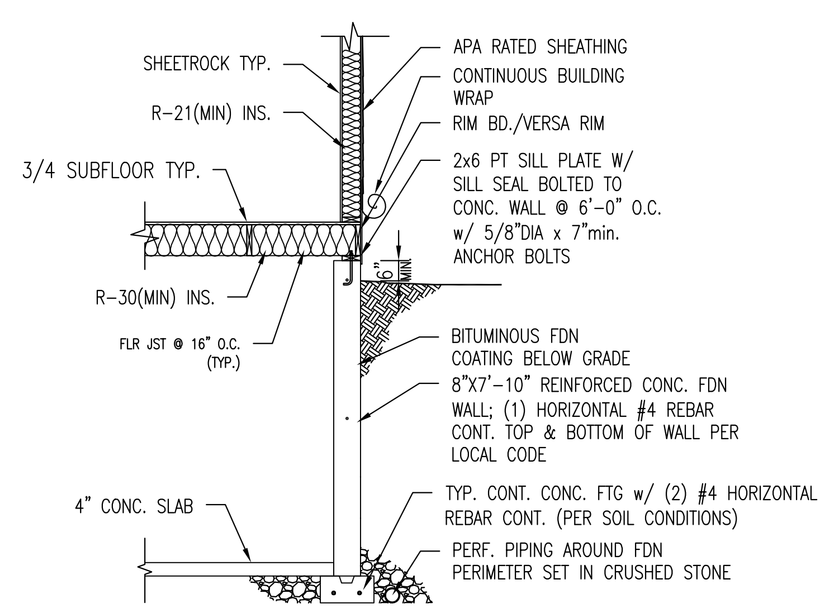

NOTE:

1. THE GROUND IMMEDIATELY ADJACENT TO THE FOUNDATION SHALL BE SLOPED AWAY FROM THE BUILDING AT A SLOPE OF 1/2" VERTICAL TO 12" HORIZONTAL FOR A MINIMUM DISTANCE OF 8'-0". THIS CONDITION SHALL EXIST AFTER SETTLEMENT OF BACKFILL HAS OCCURRED.

2. SUBSTITUTE FLR JOISTS AND STUD WALL SIZES WITH PLAN CALL OUT

TYPICAL INS. BETWEEN FDN & 1st FLR
N.T.S.

ISSUED FOR PERMIT
10/19/17

3
2
1

STATE OF MAINE
BRUCE W. MACLEOD
No. 9422
LICENSED
PROFESSIONAL ENGINEER

MACLEOD
STRUCTURAL ENGINEERS, PA
90 Bridge Street Suite 252
Westbrook, Maine 04092 207.839.0980

Reaves Residence
Lot 33 Pamela Road
Portland, Maine

TITLE: CROSS SECTIONS

DATE: 10.16.17	DRAWN BY: BWM	DRAWING NUMBER:
SCALE: as noted	PROJ NO: 2017-081	A-3