Reviewed for Code Compliance
Inspections Division
Approved with Conditions
Date: 02/15/17

FOCALPOINT ELEVATION AND DIMENSIONAL DATA					
ID	DESCRIPTION	FP-1	FP-2	FP-3	FP-4
A	TOP OF FOCALPOINT	108.37'	108.37'	118.25'	118.25'
B	TOP OF MEDIA	108.12'	108.12'	118.00'	118.00'
C	TOP OF UNDERDRAIN	106.12'	106.12'	116.00'	116.00'
D	OUTLET PIPE INVERT	105.37'	105.37'	115.25'	115.25'
E	FOCALPOINT WIDTH	2.00'	2.00'	2.00'	2.00'
F	FOCALPOINT LENGTH	6.00'	6.00'	6.00'	6.00'
G	WIDTH OF R-TANK	2.00'	2.00'	2.00'	2.00'
H	LENGTH OF R-TANK	6.00'	6.00'	6.00'	6.00'

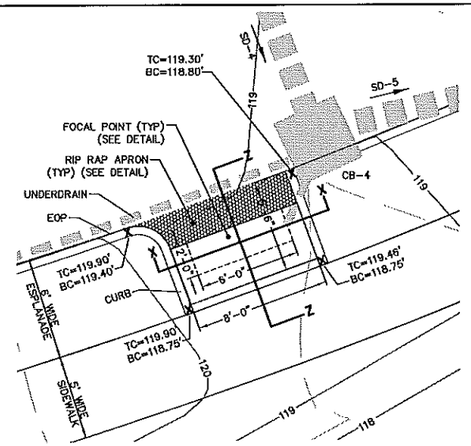

PLAN VIEW (FP-4)
1"=4'

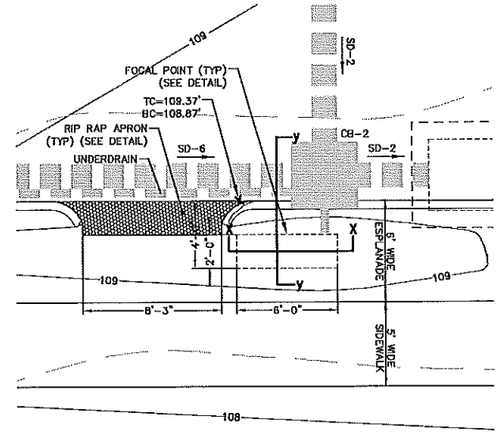

PLAN VIEW (FP-2)
1"=4'

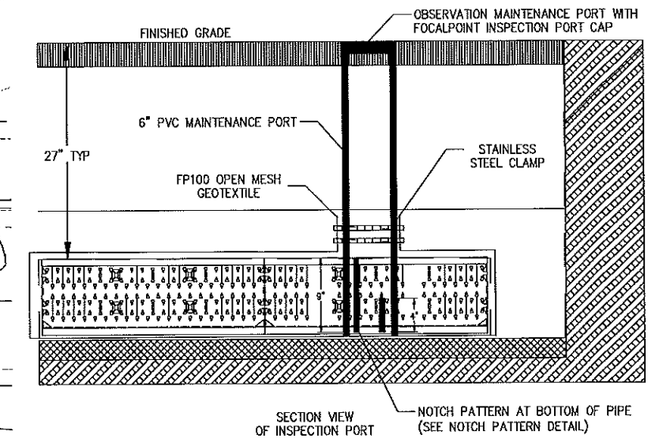

SECTION VIEW OF INSPECTION PORT
N.T.S

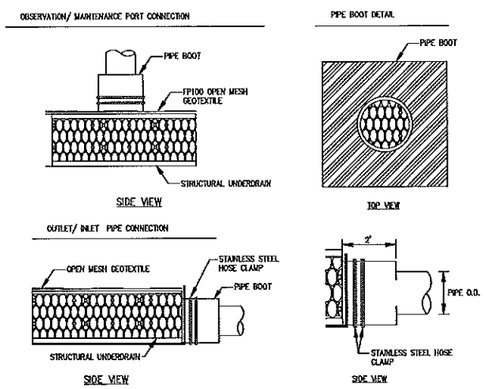

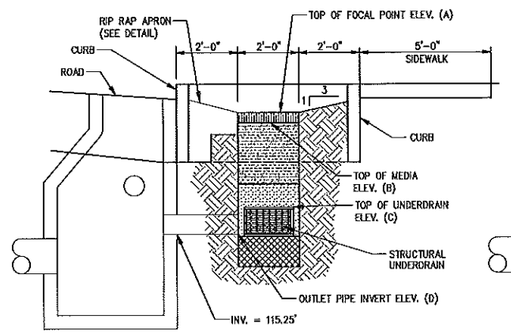

SECTION Z-Z
N.T.S.

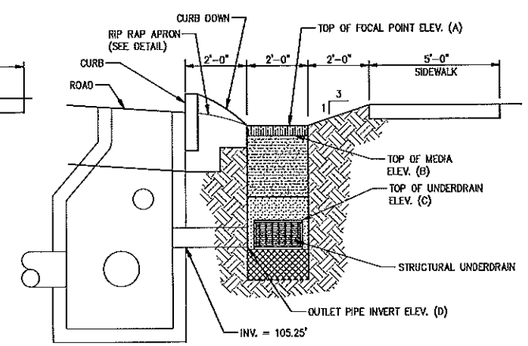

SECTION Y-Y
N.T.S.

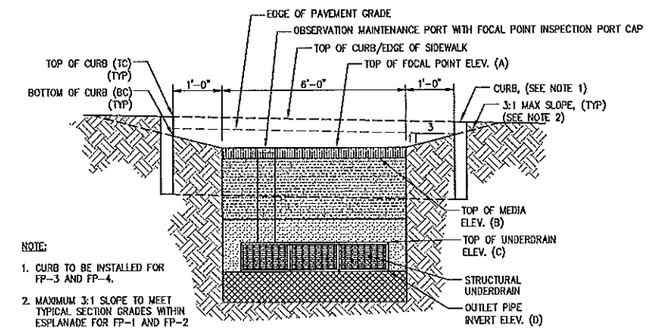

NOTE:

1. CURB TO BE INSTALLED FOR FP-3 AND FP-4.
2. MAXIMUM 3:1 SLOPE TO MEET TYPICAL SECTION GRADES WITHIN ESPLANADE FOR FP-1 AND FP-2

SECTION X-X
N.T.S.

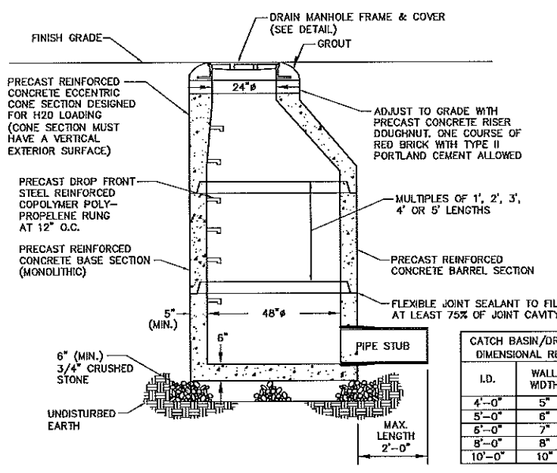

CATCH BASIN/DRAIN MANHOLE DIMENSIONAL REQUIREMENTS		
I.D.	WALL WIDTH	FLOOR THICKNESS
4'-0"	5"	6"
5'-0"	6"	6"
6'-0"	7"	6"
8'-0"	8"	8"
10'-0"	10"	9"

NOTE:
DRAIN MANHOLE, FRAME AND COVER SHALL BE DESIGNED TO WITHSTAND HS-20 LOADING.

PER MDOT ITEM 604.15

PRECAST CONCRETE DRAIN MANHOLE
N.T.S.

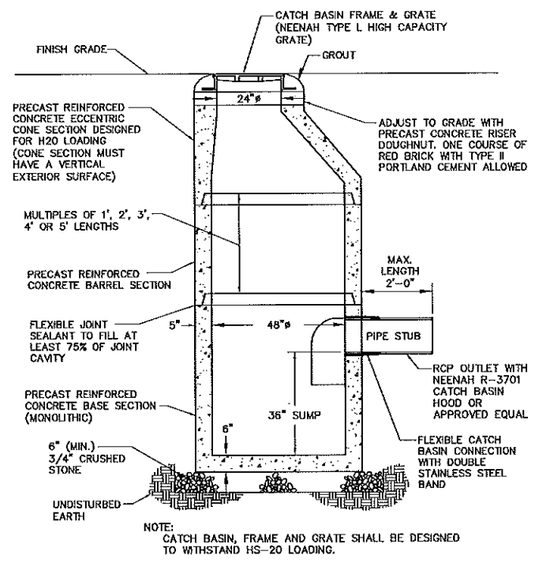

NOTE:
CATCH BASIN, FRAME AND GRATE SHALL BE DESIGNED TO WITHSTAND HS-20 LOADING.

PER MDOT ITEM 604.

PRECAST CONCRETE CATCH BASIN DETAIL
N.T.S.

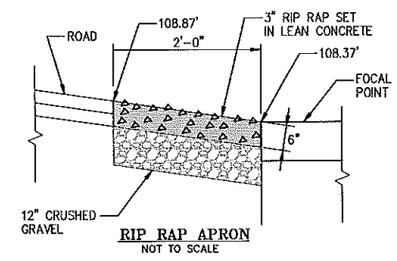

RIP RAP APRON
NOT TO SCALE

BIOFILTRATION MEDIA

1. BIOLOGICALLY ACTIVE BIOFILTRATION MEDIA SHALL BE VISUALLY INSPECTED TO ENSURE APPROPRIATE VOLUME, TEXTURE AND CONSISTENCY WITH THE APPROVED DRAWINGS, AND MUST BEAR A BATCH NUMBER MARKING FROM THE MANUFACTURER WHICH CERTIFIES PERFORMANCE TESTING OF THE BATCH TO MEET OR EXCEED THE REQUIRED INFILTRATION RATE.
2. MEDIA SHALL BE HOMOGENOUSLY BLENDED TO PROVIDE FULL FUNCTIONALITY BY A HIGHLY CONTROLLED AND ACCURATE BLENDING PROCESS.
3. MANUFACTURER SHALL HAVE A MINIMUM OF 3 YEARS' EXPERIENCE AND A MINIMUM OF 500 INSTALLED AND OPERATIONAL HIGH PERFORMANCE, HIGH FLOW RATE BIORETENTION SYSTEM UNITS.
4. WITHIN 90 DAYS AFTER PROJECT COMPLETION, THE INFILTRATION RATE SHALL BE CONFIRMED AT THE MANUFACTURER OR VENDOR'S EXPENSE, BY A METTED CONDITION HYDRAULIC CONDUCTIVITY TEST.
   A) FAILURE TO PASS THIS TEST WILL RESULT IN REMOVAL AND REPLACEMENT OF ALL MEDIA IN THE SYSTEM AT NO COST TO THE PROJECT OWNER/OPERATOR.
   B) TEST MUST UTILIZE THE EQUIPMENT AND FOLLOW THE STANDARD OPERATING PROCEDURES FOUND IN THE HARRIS COUNTY TEXAS MANUAL ENTITLED, LOW IMPACT DEVELOPMENT & GREEN INFRASTRUCTURE DESIGN CRITERIA FOR STORMWATER MANAGEMENT (2011).
   C) REPLACEMENT MEDIA, IF REQUIRED, MUST BE PROVIDED FROM A DIFFERENT BATCH THAN THE ORIGINAL MATERIAL.
5. VENDOR SHALL PROVIDE, AT NO ADDITIONAL COST TO THE PROJECT OWNER/OPERATOR, MAINTENANCE OF THE BIOFILTRATION SYSTEM FOR A PERIOD OF ONE YEAR. VENDOR SHALL MAKE AVAILABLE AN EXTENDED MAINTENANCE CONTRACT IF DESRIED BY PROJECT OWNER/OPERATOR.
6. COMPOSITION AND CHARACTERISTICS OF THE BIOFILTRATION MEDIA MUST MEET OR EXCEED THE FOLLOWING MINIMUM STANDARDS AS DEMONSTRATED BY TESTING ACCEPTABLE TO THE PROJECT ENGINEER

MEDIA SPEC TABLE	
AGGREGATE CHARACTERISTICS (TYPICAL)	
COMBINED SILT & CLAY	< 5%
SAND – FINE	< 5%
SAND – MEDIUM	2% – 20%
SAND – COURSE	5% – 35%
SAND – VERY COARSE	10% – 55%
GRAVEL	10% – 70%
INFILTRATION RATE	> 100 INCHES PER HOUR
ORGANIC *	5% – 30%
* ORGANIC SPECIFICATION	
LISTED BY ORGANIC MATERIALS REVIEW INSTITUTE	
100% NATURAL PEAT (NO COMPOSTED, SLUDGE, YARD OR LEAF WASTE)	
% PASSING 2.0 MM SIEVE	95% – 100%
% PASSING 1.0 MM SIEVE	> 80%
TOTAL CARBON	> 85%
CARBON TO NITROGEN RATIO	15:1 – 23:1
LIGNIN CONTENT	49% – 52%
HUMIC ACID	> 18%
PH	6.0 – 7.0
MOISTURE CONTENT	30% – 50%

Revision:	By:	Date:	Change:
5	SMA	3/12/15	REVISED OWNER/APPLICANT
2	SMA	11/10/14	REVISED PER PEER REVIEW COMMENTS
1	SMA	10/10/14	REVISED PER TOWN COMMENTS

PROJECT NUMBER: 33228.02 | ACAD FILE: 33229-DETAILS.DWG | SCALE: NTS | DATE: AUGUST 4, 2014

Drawing Name:
STORMBASIN DETAILS

Project Name and Location:
PAMELA ROAD EXTENSION
PAMELA ROAD, PORTLAND, MAINE 04101

Prepared For:
GENEVA VENTURES, LLC
190 US Route 1, PMB 161, FALMOUTH, MAINE 04105

STATE OF MAINE — Allen 9216 — LICENSED PROFESSIONAL ENGINEER — 2-12-15

SURVEYING ENGINEERING LAND PLANNING
Northeast Civil Solutions
INCORPORATED
153 US ROUTE 1, SCARBOROUGH, MAINE 04074
tel 207.883.1000 800.882.2227 | fax 207.883.1001 | e-mail info@northeastcivilsolutions.com

E:\LAND PROJECT\33229\33229 DRAFT VIEW\P-MAGIC\33229-DETAILS.DWG