EROSION AND SEDIMENTATION CONTROL PLAN

INTRODUCTION

THE FOLLOWING PLAN FOR CONTROLLING SEDIMENTATION AND EROSION FROM THIS PROJECT IS BASED UPON SOUND CONSERVATION PRACTICES, AND ADHERES TO THE STANDARDS DETAILED IN THE MAINE EROSION AND SEDIMENTATION CONTROL HANDBOOK FOR CONSTRUCTION: BEST MANAGEMENT PRACTICES BY THE CUMBERLAND COUNTY SOIL AND WATER CONSERVATION DISTRICT AND THE MAINE DEPARTMENT OF ENVIRONMENTAL PROTECTION DATED MARCH 2003. THE CONTRACTOR SHALL MAKE HIMSELF FAMILIAR WITH THE AFOREMENTIONED PUBLICATION AND COMPLY WITH THE PRACTICES PRESENTED THEREIN.

THIS REPORT ADDRESSES THE EROSION CONTROL MEASURES TO BE APPLIED TO THE PROPOSED SITE WORK FOR THE PROJECT. REFERENCE IS MADE TO THE EROSION CONTROL EXHIBITS, SHOWING THE LOCATIONS OF PROPOSED MEASURES INCLUDED IN THIS REPORT.

GENERAL EROSION AND SEDIMENTATION CONTROL PRACTICES

1. EROSION/SEDIMENT CONTROL DEVICES

THE FOLLOWING EROSION SEDIMENTATION CONTROL DEVICES ARE PROPOSED FOR CONSTRUCTION ON THIS PROJECT. INSTALL THESE DEVICES AS INDICATED ON THE PLANS.

1.1 SILT FENCE: SILT FENCE WILL BE INSTALLED ALONG THE DOWNGRADIENT EDGES OF DISTURBED AREAS TO TRAP RUNOFF BORNE SEDIMENTS UNTIL THE SITE IS STABILIZED. IN AREAS WHERE STORMWATER DISCHARGES THE SILT FENCE WILL BE REINFORCED WITH HAY BALES TO HELP MAINTAIN THE INTEGRITY OF THE SILT FENCE AND TO PROVIDE ADDITIONAL TREATMENT.

1.2 HAY BALES: PLACE IN DRAINAGE SWALES AND PATHS TO TRAP SEDIMENTS AND REDUCE RUNOFF VELOCITIES.

1.3 RIPRAP: PROVIDE RIPRAP IN AREAS WHERE SLOPES ARE STEEPER THAN 2:1 AND AS SHOWN ON THE PLANS.

1.4. LOAM, SEED, & MULCH: ALL DISTURBED AREAS, WHICH ARE NOT OTHERWISE TREATED, SHALL RECEIVE PERMANENT SEEDING AND MULCH TO STABILIZE THE DISTURBED AREAS WITHIN 5 DAYS OF FINAL GRADING. SEEDING REQUIREMENTS ARE PROVIDED AT THE END OF THIS SPECIFICATION.

1.5 JUTE MESH: STRAW AND HAY MULCH; USED TO COVER DENUDED AREAS UNTIL PERMANENT SEED OR EROSION CONTROL MEASURES ARE IN PLACE. MULCH CAN BE USED ON SLOPES LESS THAN 3:1. USE JUTE MESH ON SLOPES IN EXCESS OF 3:1.

1.6 INLET PROTECTION: STRAW BALE DROP INLET STRUCTURE

1.6.1 BALES SHALL BE EITHER WIRE-BOUND OR STRING TIED WITH THE BINDINGS ORIENTATED AROUND THE SIDES RATHER THAN OVER AND UNDER THE BALES.

1.6.2 BALES SHALL BE PLACED LENGTHWISE IN A SINGLE ROW SURROUNDING THE INLET, WITH THE ENDS OF ADJACENT BALES PRESSED TOGETHER.

1.6.3 THE FILTER BARRIER SHALL BE ENTRENCHED AND BACKFILLED. A TRENCH SHALL BE EXCAVATED AROUND THE INLET THE WIDTH OF A BALE TO A MINIMUM DEPTH OF 4 INCHES. AFTER THE BALES ARE STAKED, THE EXCAVATED SOIL SHALL BE BACKFILLED AND COMPACTED AGAINST THE FILTER BARRIER.

1.6.4 EACH BALE SHALL BE SECURELY ANCHORED AND HELD IN PLACE BY AT LEAST TWO STAKES OR REBARS DRIVEN THROUGH THE BALE.

1.6.5 LOOSE STRAW SHALL BE WEDGED BETWEEN BALES TO PREVENT WATER FROM ENTERING BETWEEN BALES.

1.7 MAINTENANCE

1.7.1 THE ENTRANCE SHALL BE MAINTAINED IN A CONDITION WHICH WILL PREVENT TRACKING OF SEDIMENT ONTO PUBLIC RIGHTS-OF-WAY. WHEN WASHING IS REQUIRED, IT SHALL BE DONE ON AN AREA STABILIZED WITH AGGREGATE WHICH DRAINS INTO AN APPROVED SEDIMENT TRAPPING DEVICE. ALL SEDIMENT SHALL BE PREVENTED FROM ENTERING STORM DRAINS, DITCHES, OR WATERWAYS.

2. TEMPORARY EROSION/SEDIMENTATION CONTROL MEASURES

PROVIDE THE FOLLOWING TEMPORARY EROSION/SEDIMENTATION CONTROL MEASURES DURING CONSTRUCTION OF THE DEVELOPMENT:

2.1 STABILIZED CONSTRUCTION ENTRANCE SHALL BE INSTALLED PRIOR TO ANY HAUL TO OR FROM THE SITE.

2.2 SILTATION FENCE ALONG THE DOWNGRADIENT SIDE OF THE PARKING AREAS AND OF ALL FILL SECTIONS. THE SILTATION FENCE WILL REMAIN IN PLACE UNTIL THE SITE IS REVEGETATED.

2.3 HAY BALES AT KEY LOCATIONS TO SUPPLEMENT THE SILT FENCE.

2.4 PROTECT TEMPORARY STOCKPILES OF STUMPS, GRUBBINGS, OR COMMON EXCAVATION AS FOLLOWS:

A. SOIL STOCKPILE SIDE SLOPES SHALL NOT EXCEED 2:1.

B. AVOID PLACING TEMPORARY STOCKPILES IN AREAS WITH SLOPES OVER 10 PERCENT, OR NEAR DRAINAGE SWALES.

C. STABILIZE STOCKPILES WITHIN 15 DAYS BY TEMPORARILY SEEDING WITH A HYDROSEED METHOD CONTAINING AN EMULSIFIED MULCH TACKIFIER OR BY COVERING THE STOCKPILE WITH MULCH.

D. SURROUND STOCKPILE SOIL WITH SILTATION FENCE.

2.5 ALL DENUDED AREAS WHICH HAVE BEEN ROUGH GRADED AND ARE NOT LOCATED WITHIN THE BUILDING PAD, OR PARKING AND DRIVEWAY SUBBASE AREA SHALL RECEIVE MULCH WITHIN 30 DAYS OF INITIAL DISTURBANCE OF SOIL OR WITHIN 15 DAYS AFTER COMPLETING THE ROUGH GRADING OPERATIONS. IN THE EVENT THE CONTRACTOR COMPLETES FINAL GRADING AND INSTALLATION OF LOAM AND SOD WITHIN THE TIME PERIODS PRESENTED ABOVE, INSTALLATION OF MULCH AND NETTING, WHERE APPLICABLE IS NOT REQUIRED.

2.6 IF WORK IS CONDUCTED BETWEEN OCTOBER 15 AND APRIL 15, ALL DENUDED AREAS ARE TO BE COVERED WITH HAY MULCH, APPLIED AT TWICE THE NORMAL APPLICATION RATE, AND ANCHORED WITH FABRIC NETTING. THE PERIOD BETWEEN FINAL GRADING AND MULCHING SHALL BE REDUCED TO A 15 DAY MAXIMUM.

2.7 TEMPORARY EROSION CONTROL MEASURES SHALL BE REMOVED ONCE THE SITE HAS BEEN STABILIZED OR IN AREAS WHERE PERMANENT EROSION CONTROL MEASURES HAVE BEEN INSTALLED.

3. PERMANENT EROSION CONTROL MEASURES

THE FOLLOWING PERMANENT CONTROL MEASURES ARE REQUIRED BY THIS EROSION/SEDIMENTATION CONTROL PLAN:

3.1 STORMWATER RUNOFF GENERATED BY THE DEVELOPMENT OF THIS SITE WILL BE COLLECTED IN A OPEN DRAINAGE SYSTEM.

3.2 ALL AREAS DISTURBED DURING CONSTRUCTION, BUT NOT SUBJECT TO OTHER RESTORATION (PAVING, RIPRAP, ETC.), WILL BE LOAMED, LIMED, FERTILIZED AND SODDED. NATIVE TOPSOIL SHALL BE STOCKPILED AND REUSED FOR FINAL RESTORATION WHEN IT IS OF SUFFICIENT QUALITY.

3.3 SLOPES GREATER THAN 2:1 WILL BE TREATED WITH RIPRAP. THE FOLLOWING GENERAL PRACTICES WILL BE USED TO PREVENT EROSION

4. CONSTRUCTION PHASE

DURING CONSTRUCTION OF THIS PROJECT.

4.1 ONLY THOSE AREAS UNDER ACTIVE CONSTRUCTION WILL BE CLEARED AND LEFT IN AN UNTREATED OR UNVEGETATED CONDITION. IF FINAL GRADING, LOAMING AND SEEDING WILL NOT OCCUR WITHIN 15 DAYS. SEE ITEM NO. 4.4

4.2 PRIOR TO THE START OF CONSTRUCTION IN A SPECIFIC AREA, SILT FENCING AND/OR HAY BALES WILL BE INSTALLED AT THE TOE OF SLOPE AND IN AREAS AS LOCATED ON THE PLANS TO PROTECT AGAINST ANY CONSTRUCTION RELATED EROSION. IMMEDIATELY FOLLOWING CONSTRUCTION OF CULVERTS AND SWALES, RIP RAP APRONS SHALL BE INSTALLED, AS SHOWN ON THE PLANS.

4.3 TOPSOIL WILL BE STOCKPILED WHEN NECESSARY IN AREAS WHICH HAVE MINIMUM POTENTIAL FOR EROSION AND WILL BE KEPT AS FAR AS POSSIBLE FROM THE EXISTING DRAINAGE COURSE. ALL STOCKPILES EXPECTED TO REMAIN LONGER THAN 15 DAYS SHALL BE:

A. TREATED WITH ANCHORED MULCH (WITHIN 5 DAYS OF THE LAST DEPOSIT OF STOCKPILED SOIL).

B. SEEDED WITH CONSERVATION MIX AND MULCHED IMMEDIATELY.

STOCKPILES EXPECTED TO REMAIN LONGER THAN 7 DAYS SHALL BE ENCIRCLED WITH HAY BALES OR SILT FENCE AT THE TOE OF THE PILE.

4.4 ALL DISTURBED AREAS EXPECTED TO REMAIN LONGER THAN 7 DAYS SHALL BE EITHER:

A. TREATED WITH ANCHORED MULCH IMMEDIATELY, OR

B. SEEDED WITH CONSERVATION MIX OF ANNUAL RYE GRASS (0.9 LBS/1000 SQ. FT) AND MULCHED IMMEDIATELY.

4.5 ALL GRADING WILL BE HELD TO A MAXIMUM 2:1 SLOPE WHERE PRACTICAL. ALL SLOPES WILL BE STABILIZED WITH PERMANENT SEEDING, OR WITH STONE, WITHIN 5 DAYS AFTER FINAL GRADING IS COMPLETE. (SEE POST-CONSTRUCTION REVEGETATION FOR SEEDING SPECIFICATION.)

4.6 CONSTRUCTION TRAFFIC WILL BE DIRECTED OVER THE PROPOSED ROADWAY SYSTEM. ANY AREAS SUBJECT TO RUTTING WILL BE STABILIZED IMMEDIATELY. THE ENTRANCE WILL BE SWEPT WEEKLY, SHOULD MUD BE TRACKED ONTO IT.

5. POST-CONSTRUCTION REVEGETATION

THE FOLLOWING GENERAL PRACTICES WILL BE USED TO PREVENT EROSION AS SOON AS AN AREA IS READY TO UNDERGO FINAL GRADING.

5.1 A MINIMUM OF 4" OF LOAM WILL BE SPREAD OVER DISTURBED AREAS AND GRADED TO A UNIFORM DEPTH AND NATURAL APPEARANCE, OR STONE WILL BE PLACED ON SLOPES TO STABILIZE SURFACES.

5.2 IF FINAL GRADING IS REACHED DURING THE NORMAL GROWING SEASON (4/15 TO 9/15), PERMANENT SEEDING WILL BE DONE AS SPECIFIED BELOW. PRIOR TO SEEDING, LIMESTONE SHALL BE APPLIED AT A RATE OF 138 LBS/1000 SQ. FT. AND 10:20:20 FERTILIZER AT A RATE OF 18.4 LBS/1000 SQ.FT WILL BE APPLIED. BROADCAST SEEDING AT THE FOLLOWING RATES:

LAWNS	SWALES
KENTUCKY BLUEGRASS 0.46 LBS/1000 SF.	CREEPING RED FESCUE 0.46 LBS/1000 SF
CREEPING RED FESCUE 0.46 LBS/1000 SF.	RED TOP 0.05 LBS/1000 SF. TALL
PERENNIAL RYEGRASS 0.11 LB/1000 SF.	FESCUE 0.46 LBS/1000 SF.

5.3 AN AREA SHALL BE MULCHED IMMEDIATELY AFTER IT HAS BEEN SEEDED. MULCHING SHALL CONSIST OF HAY MULCH, HYDRO- MULCH OR ANY SUITABLE SUBSTITUTE DEEMED ACCEPTABLE BY THE DESIGNER.

A. HAY MULCH SHALL BE APPLIED AT THE RATE OF 2 TONS PER ACRE. HAY MULCH SHALL BE SECURED BY EITHER:

I. BEING DRIVEN OVER BY TRACKED CONSTRUCTION EQUIPMENT ON GRADES OF 5% AND LESS.

II. BLANKETED BY TACKED PHOTODEGRADABLE/BIODEGRADABLE NETTING, OR WITH SPRAY, ON GRADES GREATER THAN 5%.

B. HYDRO-MULCH SHALL CONSIST OF A MIXTURE OF EITHER WOOD FIBER OR PAPER FIBER AND WATER SPRAYED OVER A SEEDED AREA. HYDRO-MULCH SHALL NOT BE USED BETWEEN 9/15 AND 4/15.

5.5 CONSTRUCTION SHALL BE PLANNED TO ELIMINATE THE NEED FOR SEEDING BETWEEN SEPTEMBER 15 AND APRIL 15. SHOULD SEEDING BE NECESSARY BETWEEN SEPTEMBER 15 AND APRIL 15, THE FOLLOWING PROCEDURE SHALL BE FOLLOWED.

A. ONLY UNFROZEN LOAM SHALL BE USED.

B. LOAMING, SEEDING AND MULCHING WILL NOT BE DONE OVER SNOW OR ICE COVER. IF SNOW EXISTS, IT MUST BE REMOVED PRIOR TO PLACEMENT OF SEED.

C. WHERE PERMANENT SEEDING IS NECESSARY, ANNUAL WINTER RYE (1.2 LBS/1000 SQ.FT) SHALL BE ADDED TO THE PREVIOUSLY NOTED AREAS.

D. WHERE TEMPORARY SEEDING IS REQUIRED, ANNUAL WINTER RYE (2.6 LBS/1000 SQ. FT.) SHALL BE SOWN INSTEAD OF THE PREVIOUSLY NOTED SEEDING RATE.

E. FERTILIZING, SEEDING AND MULCHING SHALL BE DONE ON LOAM THE DAY THE LOAM IS TRACKING BY MACHINERY ALONE WILL NOT SUFFICE.

F. HAY MULCH SHALL BE SECURED WITH PHOTODEGRADABLE/ BIODEGRADABLE NETTING. TRACKING BY MACHINERY ALONE WILL NOT SUFFICE.

5.6 FOLLOWING FINAL SEEDING, THE SITE WILL BE INSPECTED EVERY 30 DAYS UNTIL 80% COVER HAS BEEN ESTABLISHED. RESEEDING WILL BE CARRIED OUT BY THE CONTRACTOR WITHIN 10 DAYS OF NOTIFICATION BY THE ENGINEER THAT THE EXISTING CATCH IS INADEQUATE.

6. MONITORING SCHEDULE

THE CONTRACTOR IS RESPONSIBLE FOR INSTALLING, MONITORING, MAINTAINING, REPAIRING, REPLACING AND REMOVING ALL OF THE EROSION AND SEDIMENTATION CONTROLS OR APPOINTING A QUALIFIED SUBCONTRACTOR TO DO SO.

MAINTENANCE MEASURES WILL BE APPLIED AS NEEDED DURING THE ENTIRE CONSTRUCTION CYCLE. AFTER EACH RAINFALL, A VISUAL INSPECTION WILL BE MADE OF ALL EROSION AND SEDIMENTATION CONTROLS AS FOLLOWS:

6.1 HAY BALE BARRIERS AND SILT FENCE SHALL BE INSPECTED AND REPAIRED ONCE A WEEK OR IMMEDIATELY FOLLOWING ANY SIGNIFICANT RAINFALL. SEDIMENT TRAPPED BEHIND THESE BARRIERS SHALL BE EXCAVATED WHEN IT REACHES A DEPTH OF 6" AND REDISTRIBUTED TO AREAS UNDERGOING FINAL GRADING. SHOULD THE HAY BALE BARRIERS PROVE TO BE INEFFECTIVE, THE CONTRACTOR SHALL INSTALL SILT FENCE BEHIND THE HAY BALES.

6.2 VISUALLY INSPECT RIP RAP ONCE A WEEK OR AFTER EACH SIGNIFICANT RAINFALL AND REPAIR AS NEEDED. REMOVE SEDIMENT TRAPPED BEHIND THESE DEVICES ONCE IT ATTAINS A DEPTH EQUAL TO 1/2 THE HEIGHT OF THE DAM OR RISER. DISTRIBUTE REMOVED SEDIMENT OFF-SITE OR TO AN AREA UNDERGOING FINAL GRADING.

6.3 REVEGETATION OF DISTURBED AREAS WITHIN 25' OF DRAINAGE-COURSE/STREAM WILL BE SEEDED WITH THE "MEADOW AREA MIX" AND INSPECTED ON A WEEKLY BASIS OR AFTER EACH SIGNIFICANT RAINFALL AND RESEEDED AS NEEDED. EXPOSED AREAS WILL BE RESEEDED AS NEEDED UNTIL THE AREA HAS OBTAINED 100% GROWTH RATE. PROVIDE PERMANENT RIPRAP FOR SLOPES IN EXCESS OF 3:1 AND WITHIN 25' OR DRAINAGE COARSE.

7. EROSION CONTROL REMOVAL

AN AREA IS CONSIDERED STABLE IF IT IS PAVED, GRAVEL, OR IF 80% GROWTH OF PLANTED SEEDS IS ESTABLISHED. ONCE AN AREA IS CONSIDERED STABLE, THE EROSION CONTROL MEASURES CAN BE REMOVED AS FOLLOWS:

7.1 HAY BALES AND SILT FENCE THE HAY BALES AND SILT FENCE SHALL BE DISPOSED OF LEGALLY AND PROPERLY OFF-SITE. ALL SEDIMENT TRAPPED BEHIND THESE CONTROLS SHALL BE:

A. DISTRIBUTED TO AN AREA UNDERGOING FINAL GRADING.

B. GRADED IN AN AESTHETIC MANNER TO CONFORM TO THE TOPOGRAPHY, FERTILIZED, SEEDED AND MULCHED IN ACCORDANCE WITH THE RATES PREVIOUSLY STATED.

7.2 MISCELLANEOUS: ONCE ALL THE TRAPPED SEDIMENTS HAVE BEEN REMOVED FROM THE TEMPORARY SEDIMENTATION DEVICES, THE DISTURBED AREAS MUST BE REGRADED IN AN AESTHETIC MANNER TO CONFORM TO THE SURROUNDING TOPOGRAPHY. ONCE GRADED,THESE DISTURBED AREAS MUST BE LOAMED (IF NECESSARY) FERTILIZED, SEEDED AND MULCHED IN ACCORDANCE WITH THE RATES PREVIOUSLY STATED.

8. WINTER CONSTRUCTION

8.1 WINTER CONSTRUCTION: CONSTRUCTION PERFORMED ANY TIME BETWEEN NOVEMBER 1 AND APRIL 15 OF ANY YEAR SHALL BE CONSIDERED "WINTER CONSTRUCTION," AND SHALL CONFORM TO THE FOLLOWING CRITERIA.

8.2 MAXIMUM AREAS WITHOUT STABILIZATION: WINTER EXCAVATION AND EARTHWORK SHALL BE DONE SUCH THAT NO MORE THAN 1 ACRE OF THE SITE IS WITHOUT STABILIZATION AT ANY ONE TIME. EXPOSED AREAS SHALL BE LIMITED TO THE AREA THAT CAN BE MULCHED IN ONE DAY, PRIOR TO ANY SNOW EVENT. CONTINUATION OF EARTHWORK OPERATIONS ON ADDITIONAL AREAS SHALL NOT BEGIN UNTIL THE EXPOSED SOIL SURFACE ON THE AREA BEING WORKED HAS BEEN STABILIZED WITH EROSION CONTROL PROTECTION.

9. STABILIZATION

9.1 AN AREA SHALL BE CONSIDERED TO HAVE BEEN STABILIZED WHEN EXPOSED SURFACES HAVE BEEN EITHER MULCHED WITH STRAW OR HAY AT A RATE OF 100 LB PER 1,000 SF. (WITH OR WITHOUT SEEDING), OR DORMANT SEEDED, MULCHED AND ADEQUATELY ANCHORED BY AN APPROVED ANCHORING TECHNIQUE. IN ALL CASES, MULCH SHALL BE APPLIED SUCH THAT THE SOIL SURFACE IS NOT VISIBLE THROUGH THE MULCH.

9.2 LOAM OR SEED WILL NOT BE REQUIRED BETWEEN THE DATES OF OCTOBER 15, AND APRIL 15. DURING PERIODS WHEN TEMPERATURES ARE ABOVE FREEZING, EXPOSED SLOPES SHALL BE FINE-GRADED AND PROTECTED WITH MULCH, OR TEMPORARILY SEEDED AND MULCHED UNTIL SUCH TIME AS THE FINAL TREATMENT CAN BE APPLIED. AFTER NOVEMBER 1, ANY LOAMED, SMOOTH, FINAL GRADED AREAS MAY BE DORMANT SEEDED AT A RATE OF 200% TO 300% HIGHER THAN SPECIFIED FOR PERMANENT SEED, AND THEN MULCHED. IF CONSTRUCTION CONTINUES DURING FREEZING TEMPERATURES, ALL EXPOSED AREAS SHALL BE CONTINUOUSLY GRADED BEFORE FREEZING, AND THE SURFACE SHALL BE PROTECTED TEMPORARILY FROM EROSION BY THE APPLICATION OF MULCH. SLOPES SHALL NOT BE LEFT EXPOSED DURING THE WINTER OR ANY OTHER EXTENDED TIME OF WORK SUSPENSION UNLESS TREATED IN THE ABOVE MANNER. UNTIL SUCH TIME AS WEATHER CONDITIONS ALLOW DITCHES TO BE FINISHED WITH PERMANENT SURFACE TREATMENT, EROSION SHALL BE CONTROLLED BY THE INSTALLATION OF HAY BALES OR STONE CHECK DAMS IN ACCORDANCE WITH THE STANDARD DETAILS.

9.3 MULCH ANCHORING: MULCH ANCHORING SHALL BE INSTALLED ACCORDING TO THE FOLLOWING CRITERIA:

A. BETWEEN NOVEMBER 1 AND APRIL 15, ALL MULCH SHALL BE ANCHORED BY PEG LINE, MULCH NETTING, ASPHALT EMULSION CHEMICAL, OR TRACK OR WOOD CELLULOSE FIBER.

B. MULCH NETTING SHALL BE USED TO ANCHOR MULCH IN ALL DRAINAGE WAYS WITH SLOPES GREATER THAN 3% FOR SLOPES EXPOSED TO DIRECT WINDS, AND FOR ALL OTHER SLOPES GREATER THAN 5%.

C. MULCH NETTING SHALL BE USED TO ANCHOR MULCH IN ALL AREAS WITH SLOPES GREATER THAN 5%.

9.4 DAILY PROTECTION: DURING THE PERIOD OF OCTOBER 1 TO APRIL 15, ALL BARE AND EXPOSED EARTH SHALL BE TREATED WITH A DORMANT SEEDING, MULCHED AND ANCHORED AT THE END OF EACH WORKING DAY.

9.5 SNOW REMOVAL: SNOW SHALL BE REMOVED PRIOR TO THE APPLICATION OF SEED AND MULCH.

10. LIMITS OF CONSTRUCTION

10.1 LIMIT OF CONSTRUCTION: THE LIMIT OF CONSTRUCTION FOR THE SITE SHALL BE AS INDICATED ON THE PLANS. NO DISTURBANCE OF SOILS, VEGETATION, OR WETLANDS WILL BE PERMITTED BEYOND THE LIMIT OF DISTURBANCE, EXCEPT IN THE AREAS OF STORMWATER DITCHES, CULVERTS, AND DISCHARGE APRONS.

10.2 CONSTRUCTION STAGING AREAS: THE CONSTRUCTION AND STAGING AREAS FOR THE SITE SHALL BE LOCATED IN WITHIN THE LIMIT OF DISTURBANCE. SILT FENCING SHALL BE PLACED ALL AROUND THE PERIMETER OF THE STAGING/STORAGE AREAS.

10.3 SCHEDULE: THE ANTICIPATED CONSTRUCTION SCHEDULE IS DURING THE YEAR OF 2014, AND WILL BEGIN WITH THE INSTALLATION OF EROSION CONTROL SYSTEMS TO PROTECT DRAINAGE WAYS AND AREAS OUTSIDE THE CONSTRUCTION LIMITS. SILT FENCING AND DITCH PROTECTION MEASURES SHALL BE INSTALLED PRIOR TO ANY SOIL DISTURBANCE IN THE CONTRIBUTING DRAINAGE AREA. AS SOON AS CONTROL MEASURES ARE IN PLACE, AND PRIOR TO COMMENCING SOIL DISTURBANCE ACTIVITIES, THE CONSTRUCTION ROAD SHALL BE INSTALLED. IT IS IMPERATIVE THAT DISTURBANCES TO VEGETATION BE LIMITED ONLY TO THOSE AREAS, WHICH ARE NECESSARY TO ACCOMPLISH THE WORK.

10.4 THE FINE AND VERY FINE SANDY LOAMS THAT WILL BE EXPOSED DURING SITE PREPARATION MAY BE SUSCEPTIBLE TO EROSION, AND CAN UNDERGO STRENGTH LOSS WHEN SUBJECTED TO CONSTRUCTION TRAFFIC AND EXCAVATION ACTIVITIES, PARTICULARLY DURING PERIODS OF PRECIPITATION AND HIGH GROUND WATER LEVELS. THEREFORE, CARE WILL BE EXERCISED DURING CONSTRUCTION TO MINIMIZE DISTURBANCE OF THE BEARING SOILS. ALL TOPSOIL, ORGANIC AND LOOSE SURFACE SOIL WILL BE STRIPPED AND STORED FOR REUSE LATER. SHOULD THE SUBGRADE BECOME SOFT OR DIFFICULT TO WORK AND/OR WHEREVER SUBSURFACE DRAINAGE CAVITIES ARE ENCOUNTERED, THE SUBGRADE WILL BE OVER EXCAVATED AS REQUIRED, AND BACKFILLED WITH GRANULAR FILL OR CRUSHED STONE.

11 HOUSEKEEPING

11.1 SPILL PREVENTION: CONTROLS MUST BE USED TO PREVENT POLLUTANTS FROM BEING DISCHARGED FROM MATERIALS ON SITE, INCLUDING STORAGE PRACTICES TO MINIMIZE EXPOSURE OF THE MATERIALS TO STORMWATER, AND APPROPRIATE SPILL PREVENTION, CONTAINMENT, AND RESPONSE PLANNING AND IMPLEMENTATION.

11.2 GROUNDWATER PROTECTION: DURING CONSTRUCTION, LIQUID PETROLEUM PRODUCTS AND OTHER HAZARDOUS MATERIALS WITH THE POTENTIAL TO CONTAMINATE GROUNDWATER MAY NOT BE STORED OR HANDLED IN AREAS OF THE SITE DRAINING TO AN INFILTRATION AREA. AN "INFILTRATION AREA" IS ANY AREA OF THE SITE THAT BY DESIGN, OR AS A RESULT OF SOILS, TOPOGRAPHY AND OTHER RELEVANT FACTORS ACCUMULATES RUNOFF THAT INFILTRATES INTO THE SOIL. DIKES, BERMS, SUMPS, AND OTHER FORMS OF SECONDARY CONTAINMENT THAT PREVENT DISCHARGE TO GROUNDWATER MAY BE USED TO ISOLATE PORTIONS OF THE SITE FOR THE PURPOSES OF STORAGE AND HANDLING OF THESE MATERIALS.

11.3 FUGITIVE SEDIMENT AND DUST: ACTIONS MUST BE TAKEN TO ENSURE THAT ACTIVITIES DO NOT RESULT IN NOTICEABLE EROSION OF SOILS OR FUGITIVE DUST EMISSIONS DURING OR AFTER CONSTRUCTION. OIL MAY NOT BE USED FOR DUST CONTROL.

11.4 DEBRIS AND OTHER MATERIALS: LITTER, CONSTRUCTION DEBRIS, AND CHEMICALS EXPOSED TO STORMWATER MUST BE PREVENTED FROM BECOMING A POLLUTANT SOURCE.

11.5 TRENCH OR FOUNDATION DE-WATERING: TRENCH DE-WATERING IS THE REMOVAL OF WATER FROM TRENCHES, FOUNDATIONS, COFFER DAMS, PONDS, AND OTHER AREAS WITHIN THE CONSTRUCTION AREA THAT RETAIN WATER AFTER EXCAVATION. IN MOST CASES THE COLLECTED WATER IS HEAVILY SILTED AND HINDERS CORRECT AND SAFE CONSTRUCTION PRACTICES. THE COLLECTED WATER MUST BE REMOVED FROM THE PONDED AREA, EITHER THROUGH GRAVITY OR PUMPING, AND MUST BE SPREAD THROUGH NATURAL WOODED BUFFERS OR REMOVED TO AREAS THAT ARE SPECIFICALLY DESIGNED TO COLLECT THE MAXIMUM AMOUNT OF SEDIMENT POSSIBLE, LIKE A COFFERDAM SEDIMENTATION BASIN. AVOID ALLOWING THE WATER TO FLOW OVER DISTURBED AREAS OF THE SITE. EQUIVALENT MEASURES MAY BE TAKEN IF APPROVED BY THE DEPARTMENT.

11.6 NON-STORMWATER DISCHARGES: IDENTIFY AND PREVENT CONTAMINATION BY NON-STORMWATER DISCHARGES.

11.7 STREET SWEEPING: ANY SOIL MATERIAL TRACKED ONTO THE PUBLIC ROADWAY SHALL BE SWEPT ON A DAILY BASIS.

11.8 ADDITIONAL REQUIREMENTS: ADDITIONAL REQUIREMENTS MAY BE APPLIED ON A SITE-SPECIFIC BASIS.

BASIC STANDARDS – EROSION CONTROL MEASURES:

MINIMUM EROSION CONTROL MEASURES WILL NEED TO BE IMPLEMENTED AND THE APPLICANT WILL BE RESPONSIBLE TO MAINTAIN ALL COMPONENTS OF THE EROSION CONTROL PLAN UNTIL THE SITE IS FULLY STABILIZED. HOWEVER, BASED ON SITE AND WEATHER CONDITIONS DURING CONSTRUCTION, ADDITIONAL EROSION CONTROL MEASURES MAY NEED TO BE IMPLEMENTED. ALL AREAS OF INSTABILITY AND EROSION MUST BE REPAIRED IMMEDIATELY DURING CONSTRUCTION AND NEED TO BE MAINTAINED UNTIL THE SITE IS FULLY STABILIZED OR VEGETATION IS ESTABLISHED. A CONSTRUCTION LOG MUST BE MAINTAINED FOR THE EROSION AND SEDIMENTATION CONTROL INSPECTIONS AND MAINTENANCE.

GENERAL NOTE:

ALL EROSION AND SEDIMENTATION CONTROL MEASURES SHALL MEET MDOT ITEM 656.

DEP NOTES

CONSTRUCTION OVERSIGHT
(DETAILS AND NOTES FOR PLANS)
THE APPLICANT WILL RETAIN THE SERVICES OF A PROFESSIONAL ENGINEER TO INSPECT THE CONSTRUCTION AND STABILIZATION OF ALL STORMWATER MANAGEMENT STRUCTURES. IF NECESSARY, THE INSPECTING ENGINEER WILL INTERPRET THE POND'S CONSTRUCTION PLAN FOR THE CONTRACTOR. ONCE ALL STORMWATER MANAGEMENT STRUCTURES ARE CONSTRUCTED AND STABILIZED, THE INSPECTING ENGINEER WILL NOTIFY THE DEPARTMENT IN WRITING WITHIN 30 DAYS TO STATE THAT THE POND HAS BEEN COMPLETED. ACCOMPANYING THE ENGINEER'S NOTIFICATION MUST BE A LOG OF THE ENGINEER'S INSPECTIONS GIVING THE DATE OF EACH INSPECTION, THE TIME OF EACH INSPECTION, AND THE ITEMS INSPECTED ON EACH VISIT, AND INCLUDE ANY TESTING DATA OR SIEVE ANALYSIS DATA OF EVERY MINERAL SOIL AND SOIL MEDIA SPECIFIED IN THE PLANS AND USED ON SITE.

UNDERDRAINED FILTER BASINS
CONSTRUCTION SEQUENCE: THE SOIL FILTER MEDIA AND VEGETATION MUST NOT BE INSTALLED UNTIL THE AREA THAT DRAINS TO THE FILTER HAS BEEN PERMANENTLY STABILIZED WITH PAVEMENT OR OTHER STRUCTURE, 90% VEGETATION COVER, OR OTHER PERMANENT STABILIZATION UNLESS THE RUNOFF FROM THE CONTRIBUTING DRAINAGE AREA IS DIVERTED AROUND THE FILTER UNTIL STABILIZATION IS COMPLETED.

COMPACTION OF SOIL FILTER: FILTER SOIL MEDIA AND UNDERDRAIN BEDDING MATERIAL MUST BE COMPACTED TO BETWEEN 90 % AND 92% STANDARD PROCTOR. THE BED SHOULD BE INSTALLED IN AT LEAST 2 LIFTS OF 9 INCHES TO PREVENT POCKETS OF LOOSE MEDIA.

CONSTRUCTION OVERSIGHT: INSPECTION BY A PROFESSIONAL ENGINEER WILL OCCUR AT A MINIMUM:
- AFTER THE PRELIMINARY CONSTRUCTION OF THE FILTER GRADES AND ONCE THE UNDERDRAIN PIPES ARE INSTALLED BUT NOT BACKFILLED,
- AFTER THE DRAINAGE LAYER IS CONSTRUCTED AND PRIOR TO THE INSTALLATION OF THE FILTER MEDIA,
- AFTER THE FILTER MEDIA HAS BEEN INSTALLED AND SEEDED. BIO-RETENTION CELLS MUST BE STABILIZED PER THE PROVIDED PLANTING SCHEME AND DENSITY FOR THE CANOPY COVERAGE OF 30 AND 50%
- AFTER ONE YEAR TO INSPECT HEALTH OF THE VEGETATION AND MAKE CORRECTIONS, AND
- ALL THE MATERIAL USED FOR THE CONSTRUCTION OF THE FILTER BASIN MUST BE CONFIRMED AS SUITABLE BY THE DESIGN ENGINEER. TESTING MUST BE DONE BY A CERTIFIED LABORATORY TO SHOW THAT THEY ARE PASSING DEP SPECIFICATIONS.

TESTING AND SUBMITTALS: THE CONTRACTOR SHALL IDENTIFY THE LOCATION OF THE SOURCE OF EACH COMPONENT OF THE FILTER MEDIA. ALL RESULTS OF FIELD AND LABORATORY TESTING SHALL BE SUBMITTED TO THE PROJECT ENGINEER FOR CONFIRMATION. THE CONTRACTOR SHALL:
- SELECT SAMPLES FOR SAMPLING OF EACH TYPE OF MATERIAL TO BE BLENDED FOR THE MIXED FILTER MEDIA AND SAMPLES OF THE UNDERDRAIN BEDDING MATERIAL. SAMPLES MUST BE A COMPOSITE OF THREE DIFFERENT LOCATIONS (GRABS) FROM THE STOCKPILE OR PIT FACE. SAMPLE SIZE REQUIRED WILL BE DETERMINED BY THE TESTING LABORATORY.
- PERFORM A SIEVE ANALYSIS CONFORMING TO STM C136 (STANDARD TEST METHOD FOR SIEVE ANALYSIS OF FINE AND COURSE AGGREGATES 1996A) ON EACH TYPE OF THE SAMPLE MATERIAL. THE RESULTING SOIL FILTER MEDIA MIXTURE MUST HAVE 8% TO 12% BY WEIGHT PASSING THE #200 SIEVE, A CLAY CONTENT OF LESS THAN 2% (DETERMINED HYDROMETER GRAIN SIZE ANALYSIS) AND HAVE 10% DRY WEIGHT OF ORGANIC MATTER.
- PERFORM A PERMEABILITY TEST ON THE SOIL FILTER MEDIA MIXTURE CONFORMING TO ASTM D2434 WITH THE MIXTURE COMPACTED TO 90-92% OF MAXIMUM DRY DENSITY BASED ON ASTM D698.

LOT GRADING AND DRIVEWAY LOCATION
INSPECTIONS A PROFESSIONAL ENGINEER WILL CONSIST OF A VISIT TO THE SITE PRIOR TO CONSTRUCTION TO CONSULT WITH THE EARTHWORK CONTRACTOR AND A POST CONSTRUCTION MEETING TO CONFIRM GRADING ON LOTS AND FOR ALL DRIVEWAYS TO ENSURE RUNOFF IS DIRECTED ACCORDING TO PLANS AND TO OVERSEE THE RE-STABILIZATION OF THE LOT INTO A VEGETATED COVER.

DEWATERING
A DEWATERING PLAN IS NEEDED TO ADDRESS EXCAVATION DE-WATERING FOLLOWING HEAVY RAINFALL EVENTS OR WHERE THE EXCAVATION MAY INTERCEPT THE GROUNDWATER TABLE DURING CONSTRUCTION. THE COLLECTED WATER NEEDS TREATMENT AND A DISCHARGE POINT THAT WILL NOT CAUSE DOWNGRADIENT EROSION AND OFFSITE SEDIMENTATION OR WITHIN A RESOURCE. PLEASE FOLLOW THE DETAILS OF SUCH A PLAN.

BASIC STANDARDS – EROSION CONTROL MEASURES
MINIMUM EROSION CONTROL MEASURES WILL NEED TO BE IMPLEMENTED AND THE APPLICANT WILL BE RESPONSIBLE TO MAINTAIN ALL COMPONENTS OF THE EROSION CONTROL PLAN UNTIL THE SITE IS FULLY STABILIZED. HOWEVER, BASED ON SITE AND WEATHER CONDITIONS DURING CONSTRUCTION, ADDITIONAL EROSION CONTROL MEASURES MAY NEED TO BE IMPLEMENTED. ALL AREAS OF INSTABILITY AND EROSION MUST BE REPAIRED IMMEDIATELY DURING CONSTRUCTION AND NEED TO BE MAINTAINED UNTIL THE SITE IS FULLY STABILIZED OR VEGETATION IS ESTABLISHED. A CONSTRUCTION LOG MUST BE MAINTAINED FOR THE EROSION AND SEDIMENTATION CONTROL INSPECTIONS AND MAINTENANCE.

ROOF DRIP EDGE FILTERS
INSPECTIONS BY A PROFESSIONAL ENGINEER SHALL CONSIST OF WEEKLY VISITS TO THE SITE TO INSPECT EACH THE ROOF DRIP EDGE FILTER'S UNDERDRAIN CONSTRUCTION, FILTER MATERIAL PLACEMENT, AND OVERFLOW FROM INITIAL GROUND DISTURBANCE TO FINAL STABILIZATION OF THE FILTER.

THE MAINE EROSION AND SEDIMENT CONTROL HANDBOOK FOR CONSTRUCTION: BEST MANAGEMENT PRACTICES AS PUBLISHED IN 1991 BY THE CUMBERLAND COUNTY SOIL AND WATER CONSERVATION DISTRICT AND THE MAINE DEPARTMENT OF ENVIRONMENTAL PROTECTION HAS BEEN CHANGED TO THE "MAINE EROSION AND SEDIMENT CONTROL BMPS" PUBLISHED BY THE MAINE DEP IN 2003. ALL REFERENCES SHOULD BE CHANGED TO THE NEW MANUAL.
HTTP://WWW.MAINE.GOV/DEP/BLWQ/DOCSTAND/ESCBMPS/INDEX.HTM

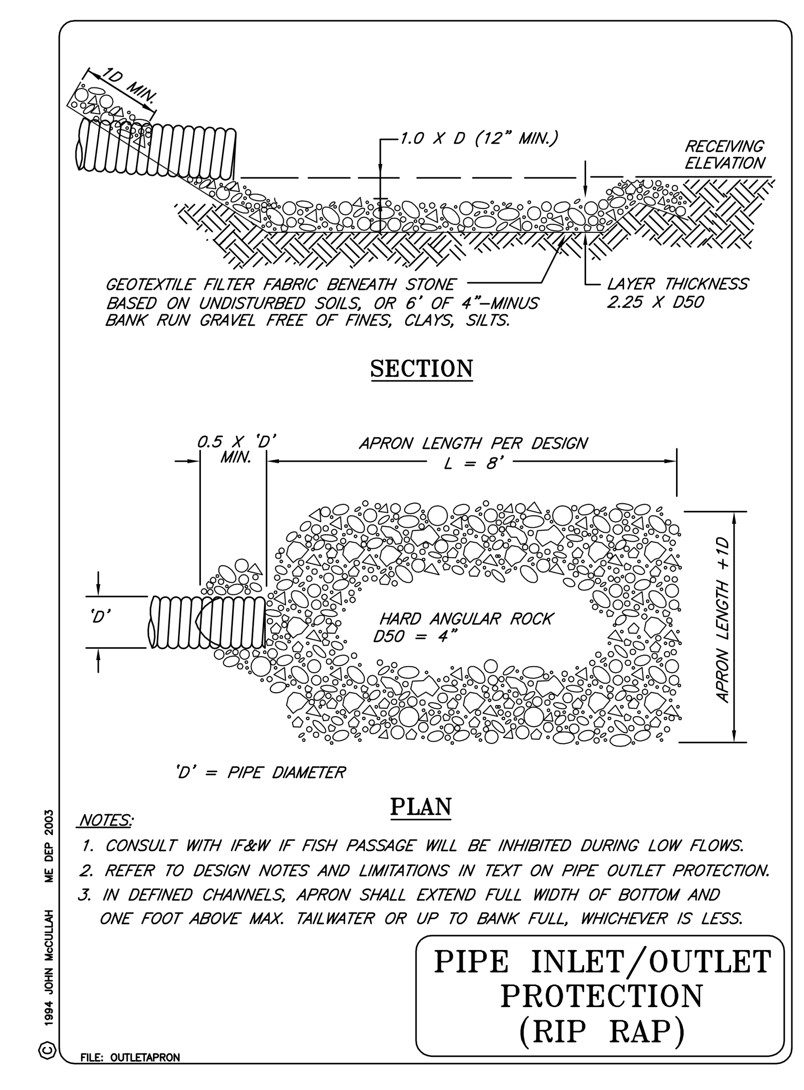

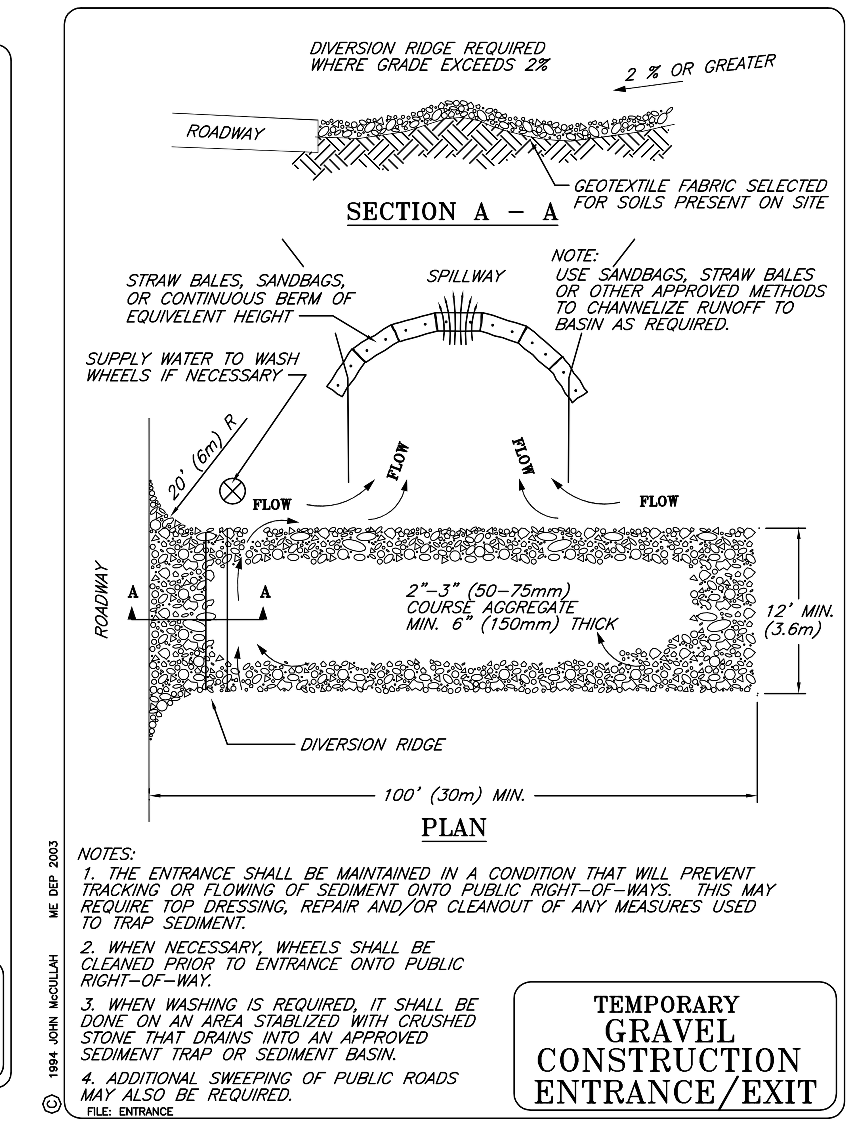

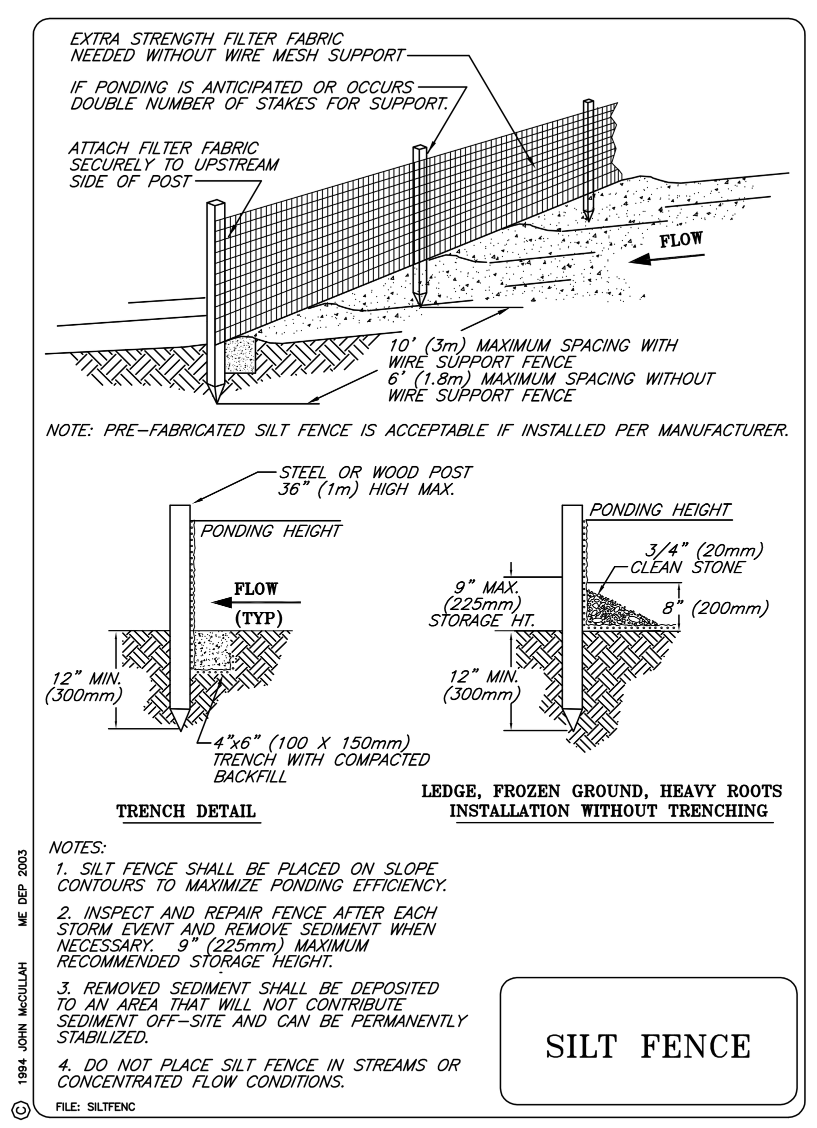

EROSION CONTROL MIX BERMS
EROSION CONTROL MIX CAN BE MANUFACTURED ON OR OFF THE PROJECT SITE. IT MUST CONSIST PRIMARILY OF ORGANIC MATERIAL, SEPARATED AT THE POINT OF GENERATION, AND MAY INCLUDE: SHREDDED BARK, STUMP GRINDINGS, COMPOSTED BARK, OR ACCEPTABLE MANUFACTURED PRODUCTS. WOOD AND BARK CHIPS, GROUND CONSTRUCTION DEBRIS OR REPROCESSED WOOD PRODUCTS WILL NOT BE ACCEPTABLE AS THE ORGANIC COMPONENT OF THE MIX.

COMPOSITION
EROSION CONTROL MIX SHALL CONTAIN A WELL-GRADED MIXTURE OF PARTICLE SIZES AND MAY CONTAIN ROCKS LESS THAN 4" IN DIAMETER. EROSION CONTROL MIX MUST BE FREE OF REFUSE, PHYSICAL CONTAMINANTS, AND MATERIAL TOXIC TO PLANT GROWTH. THE MIX COMPOSITION SHALL MEET THE FOLLOWING STANDARDS:

- THE ORGANIC MATTER CONTENT SHALL BE BETWEEN 80 AND 100%, DRY WEIGHT BASIS.
- PARTICLE SIZE BY WEIGHT SHALL BE 100 % PASSING A 6" SCREEN AND A MINIMUM OF 70 %, MAXIMUM OF 85%, PASSING A 0.75" SCREEN.
- THE ORGANIC PORTION NEEDS TO BE FIBROUS AND ELONGATED.
- LARGE PORTIONS OF SILTS, CLAYS OR FINE SANDS ARE NOT ACCEPTABLE IN THE MIX.
- SOLUBLE SALTS CONTENT SHALL BE < 4.0 MMHOS/CM.
- THE PH SHOULD FALL BETWEEN 5.0 AND 8.0.

INSTALLATION
- THE BARRIER MUST BE PLACED ALONG A RELATIVELY LEVEL CONTOUR. IT MAY BE NECESSARY TO CUT TALL GRASSES OR WOODY VEGETATION TO AVOID CREATING VOIDS AND BRIDGES THAT WOULD ENABLE FINES TO WASH UNDER THE BARRIER THROUGH THE GRASS BLADES OR PLANT STEMS.
- ON SLOPES LESS THAN 5 % OR AT THE BOTTOM OF STEEPER SLOPES (<2:1) UP TO 20 FEET LONG, THE BARRIER MUST BE A *MINIMUM* OF 12" HIGH, AS MEASURED ON THE UPHILL SIDE OF THE BARRIER, *AND A MINIMUM* OF TWO FEET WIDE. *ON LONGER OR STEEPER SLOPES*, THE BARRIER SHOULD BE WIDER TO ACCOMMODATE THE ADDITIONAL RUNOFF.
- FROZEN GROUND, OUTCROPS OF BEDROCK AND VERY ROOTED FORESTED AREAS ARE LOCATIONS WHERE BERMS OF EROSION CONTROL MIX ARE MOST PRACTICAL AND EFFECTIVE.
- OTHER BMPS SHOULD BE USED AT LOW POINTS OF CONCENTRATED RUNOFF, BELOW CULVERT OUTLET APRONS, AROUND CATCH BASINS AND CLOSED STORM SYSTEMS, AND AT THE BOTTOM OF STEEP PERIMETER SLOPES THAT ARE MORE THAN 50 FEET FROM TOP TO BOTTOM (I.E., A LARGE UP GRADIENT CONTRIBUTING WATERSHED).

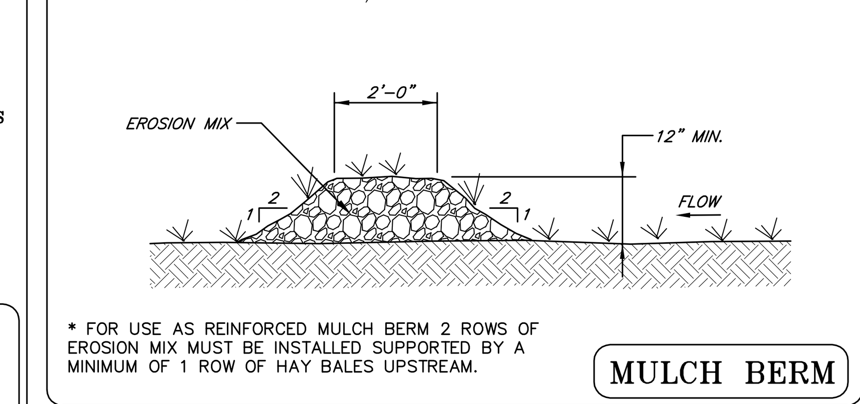

* FOR USE AS REINFORCED MULCH BERM 2 ROWS OF EROSION MIX MUST BE INSTALLED SUPPORTED BY A MINIMUM OF 1 ROW OF HAY BALES UPSTREAM.

MULCH BERM

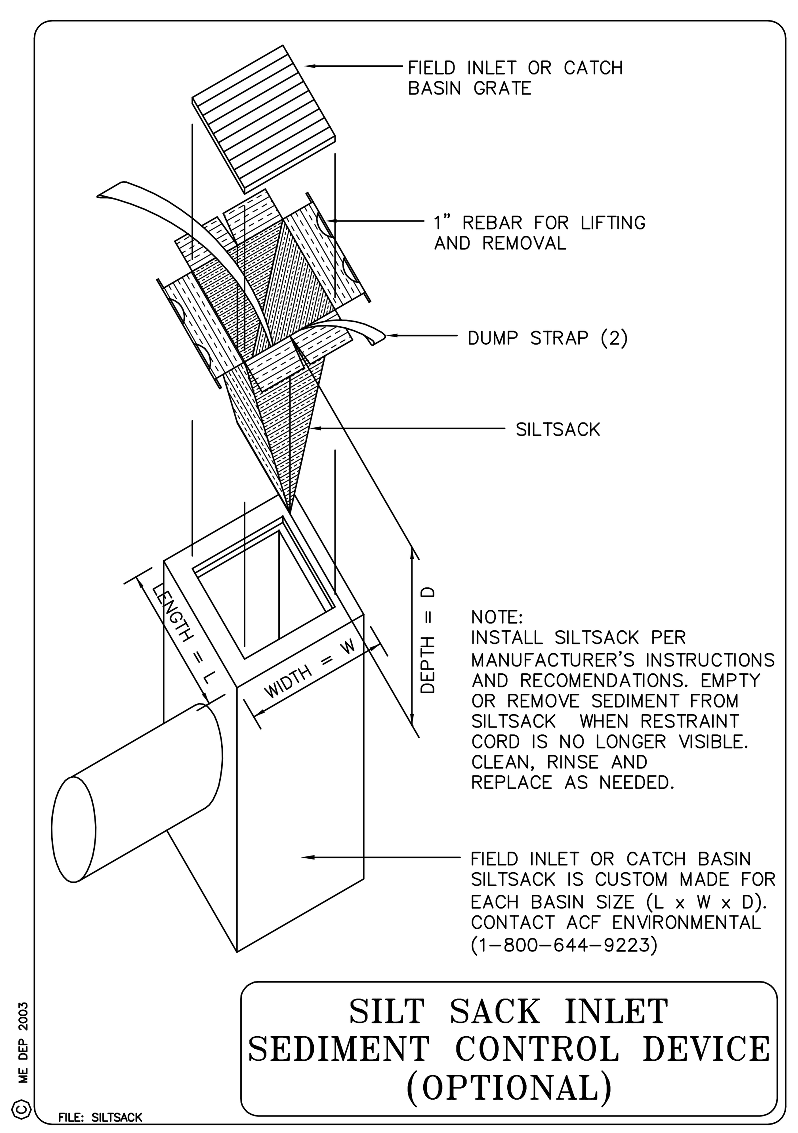

SILT SACK INLET SEDIMENT CONTROL DEVICE (OPTIONAL)

NOTES:
1. BALES SHALL BE PLACED IN A ROW WITH ENDS TIGHTLY ABUTTING THE ADJACENT BALES.
2. EACH BALE SHALL BE EMBEDDED IN THE SOIL A MINIMUM OF 4".
3. BALES SHALL BE SECURELY ANCHORED IN PLACE BY STAKES OR REBARS DRIVEN THROUGH THE BALES. THE FIRST STAKE IN EACH BALE SHALL BE ANGLED TOWARD PREVIOUSLY LAID BALE TO FORCE BALES TOGETHER.
4. INSPECTION SHALL BE FREQUENT AND REPAIR OR REPLACEMENT SHALL BE MADE PROMPTLY AS DIRECTED BY PROJECT ENGINEER.
5. BALES SHALL BE REMOVED WHEN THEY HAVE SERVED THEIR USEFULNESS SO AS NOT TO BLOCK OR IMPEDE STORM FLOW OR DRAINAGE.

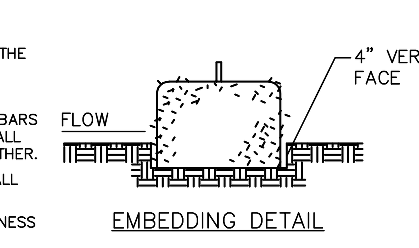

EMBEDDING DETAIL

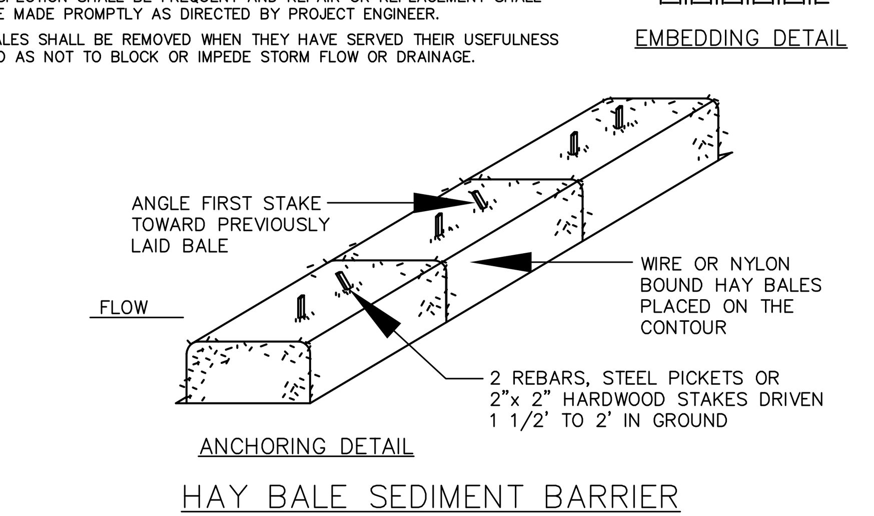

ANCHORING DETAIL

HAY BALE SEDIMENT BARRIER
NOT TO SCALE

THIS PLAN IS FOR REVIEW PURPOSES ONLY AND IS NOT INTENDED FOR CONSTRUCTION OR RECORDING

Revision:	By:	Date:	Change:
2	TAL	11/14/14	REVISED PER TOWN COMMENTS
1	SMA	10/14/14	REVISED PER TOWN COMMENTS

PROJECT NUMBER: 33229.02	ACAD FILE: 33229-DETAILS.DWG	SCALE: NTS	DATE: AUGUST 4, 2014

Drawing Name:
EROSION & SEDIMENTATION CONTROL NOTES AND DETAILS

Project Name and Location:
PAMELA ROAD EXTENSION
PAMELA ROAD, PORTLAND, MAINE 04101

Prepared For:
TELOS CAPITAL, LLC
2 MILK STREET, PORTLAND, MAINE 04101

STATE OF MAINE
Allen
9218
LICENSED PROFESSIONAL ENGINEER
11-18-14

SURVEYING ENGINEERING LAND PLANNING
Northeast Civil Solutions
INCORPORATED
153 US ROUTE 1, SCARBOROUGH, MAINE 04074
tel 207.883.1000 800.882.2227
fax 207.883.1001
e-mail info@northeastcivilsolutions.com

E:\LAND PROJECT\33000\33229 CREST VIEW\PLANSET\33229-DETAILS.DWG