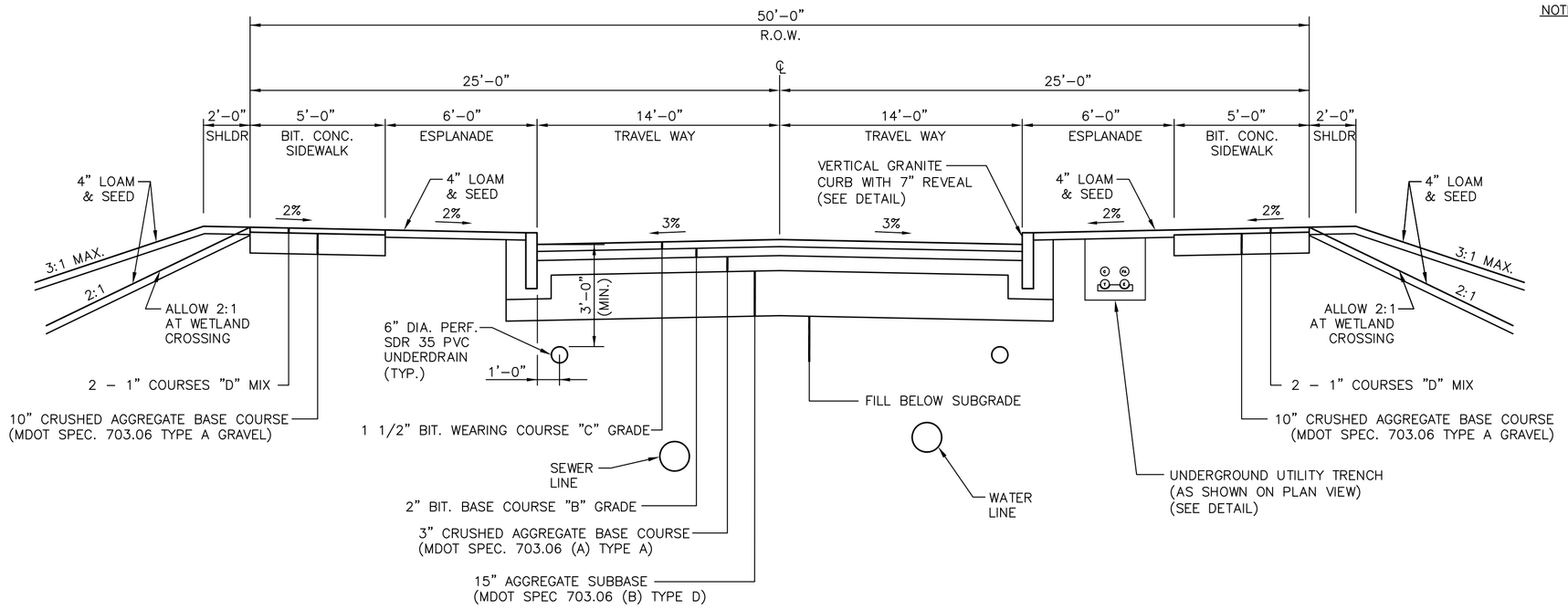

TYPICAL ROAD CROSS SECTION

NOT TO SCALE

NOTES:

1) LOAM AND SEED SHALL BE IN ACCORDANCE WITH MDOT SPECIFICATIONS 615 AND 618, METHOD #1.

2) AGGREGATE SUBBASE SHALL BE IN ACCORDANCE WITH MDOT SPECIFICATIONS, SECTION 403 AND SHALL NOT CONTAIN PARTICLES OF ROCK EXCEEDING 6" IN ANY DIMENSION. MATERIAL FOR ROAD EMBANKMENT SHALL BE SUITABLE EXCAVATED MATERIAL APPROVED BY TOWN INSPECTOR AND MUST MEET MDOT SPECIFICATION 703.19 GRANULAR BORROW. SUITABLE GRANULAR FILL MATERIAL SHALL CONSIST OF HARD DURABLE MINERALS LESS VERY FINE SANDS, SILT, CLAY OR ORGANIC MATERIALS. MATERIAL IS TO BE PLACED IN LIFTS NOT TO EXCEED 12 INCHES. COMPACTION SHALL BE ACHIEVED BY MECHANICAL MEANS OF A "DYNAPAC", RIDING ROLLER, OR TRACKING WITH HEAVY EQUIPMENT.

3) ENTIRE WIDTH OF ROAD AND SHOULDERS IS TO BE STRIPPED AND GRUBBED OF TOP SOIL, ORGANICS AND ALL DELETERIOUS MATERIAL. ALL STUMPS AND UNSUITABLE MATERIAL (IF ANY) SHALL BE REMOVED IF WITHIN 5 FEET OF FINISHED GRADE UNDER PAVED AREAS.

4) SEE GRADING PLAN & PROFILE FOR GRADING INTENT.

5) ALL PROPOSED INFRASTRUCTURE LOCATED WITHIN THE ROAD RIGHT OF WAY SHALL MEET CITY OF PORTLAND TECHNICAL MANUAL STANDARDS.

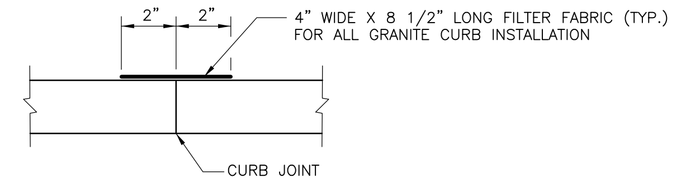

PLAN VIEW

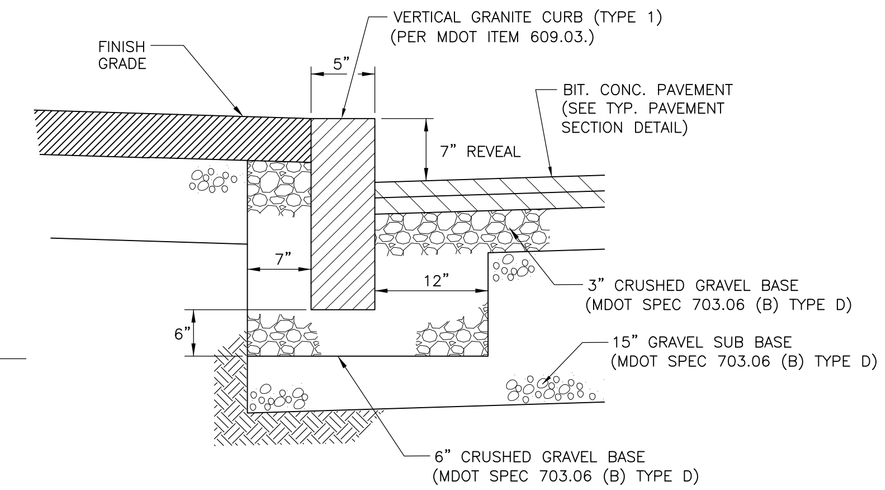

NOTE: PER MDOT ITEM 703.06 (B) TYPE D

VERTICAL GRANITE CURB DETAIL

N.T.S.

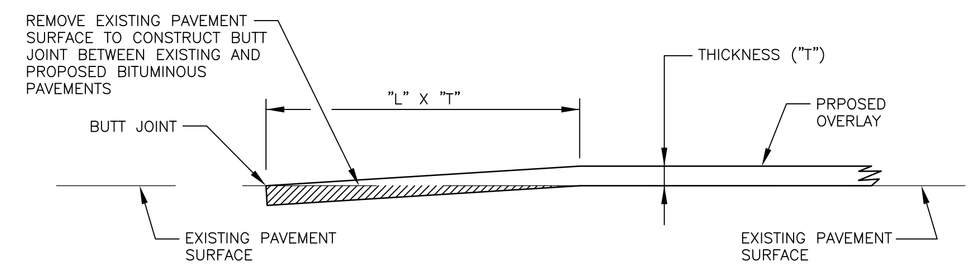

DESIGN OR POST SPEED (MPH)	65	60	55	50	45	40	35	30	25
"L" IN FEET/INCH OF THICKNESS	65	60	55	50	45	40	35	30	25

NOTES:

1. THE ABOVE LENGTHS ARE INTENDED FOR PROFILE GRADES OF 2% OR LESS. WHEN PROFILE GRADES ARE GREATER THAN 2%, "L" MAY BE ADJUSTED TO SUIT FIELD CONDITIONS WHEN DIRECTED BY THE RESIDENT.
2. WHEN CONSTRUCTING BUTT JOINTS AT INTERSECTIONS OR RAMPS, "L" SHALL BE 16 FT/INCH OF THICKNESS UNLESS OTHERWISE DIRECTED BY THE RESIDENT.
3. SPECIAL ATTENTION SHALL BE PAID TO CURB SECTIONS TO ASSURE PROPER DRAINAGE AND THAT THERE ARE NO FLAT AREAS. "L" MAY BE ADJUSTED TO SUIT FIELD CONDITIONS WHEN DIRECTED BY THE RESIDENT.

PAVEMENT OVERLAY

BUTT JOINT DETAIL (ROADWAYS)

NOT TO SCALE

TRAFFIC SIGNS

IDENTIFICATION NUMBER	SIGN HEIGHT	SIGN WIDTH	POST PER SIGN	TEXT	NUMBER OF SIGNS REQ'D.	SIGN AREA SQ. FT. NOM. AREA	SIGN AREA SQ. FT. TOTAL AREA	REMARKS
R1-1	24"	24"	1	STOP	1	4.0	4.0	PER MUTCD

NOTE: ALL SIGNS SHALL CONFORM TO MUTCD STANDARDS AND MDOT ITEM 645

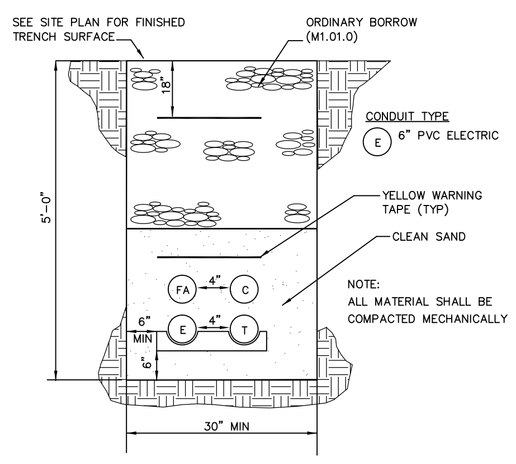

NOTE:
ALL MATERIAL SHALL BE COMPACTED MECHANICALLY

*ALL ROAD CROSSINGS AND DRIVEWAY CROSSINGS SHALL BE IN CONDUIT AS APPROVED BY PROVIDER

ALL TRENCH CONDUITS SHALL BE SCHEDULE 40 PVC, UNLESS OTHERWISE NOTED

COMMON TRENCH DETAIL ELECTRIC/TELEPHONE/FIRE ALARM/CABLE

NOT TO SCALE

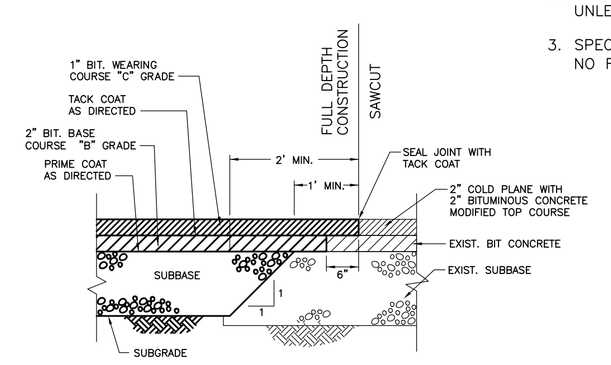

SAWCUT DETAIL

NOT TO SCALE

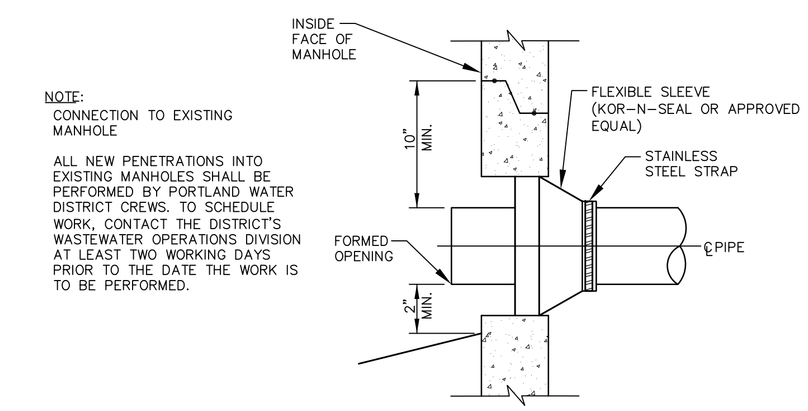

NOTE:
CONNECTION TO EXISTING MANHOLE

ALL NEW PENETRATIONS INTO EXISTING MANHOLES SHALL BE PERFORMED BY PORTLAND WATER DISTRICT CREWS. TO SCHEDULE WORK, CONTACT THE DISTRICT'S WASTEWATER OPERATIONS DIVISION AT LEAST TWO WORKING DAYS PRIOR TO THE DATE THE WORK IS TO BE PERFORMED.

NEW PIPE TO EXISTING MANHOLE CONNECTION DETAIL – 4" TO 24"

NOT TO SCALE

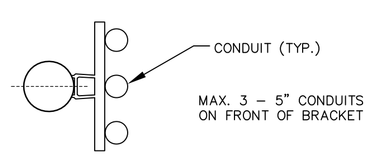

PLAN

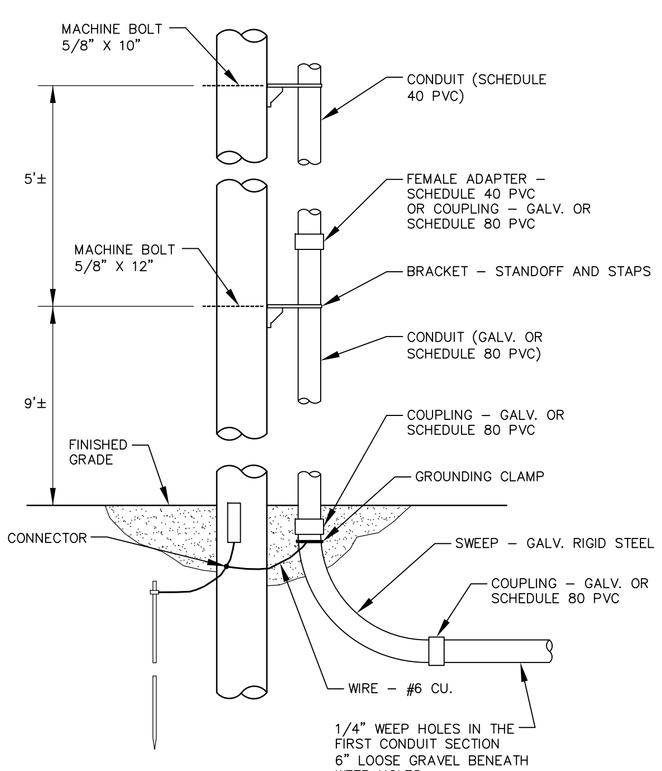

NOTES:

1. LOCATE RISER ON POLE AWAY FROM TRAFFIC.
2. BOND GALVANIZED CONDUIT TO GROUND.
3. LEAVE TOP OF CONDUIT OPEN.
4. FIRST SECTION OF RISER SHALL BE GALVANIZED RIGID STEEL OR SCHEDULE 80 PVC.
5. SWEEP SHALL BE GALVANIZED RIGID STEEL.

TYPICAL RISER DETAIL

NOT TO SCALE

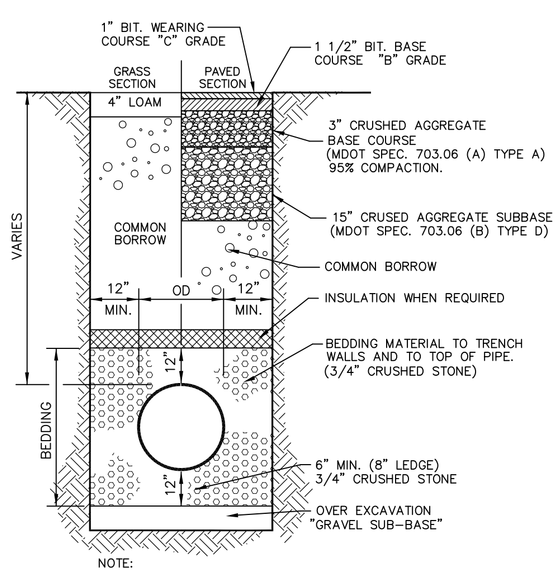

NOTE:
1. ALL MATERIAL SHALL BE COMPACTED TO 95% OF THE MAXIMUM PROCTOR DENSITY (MODIFIED)
2. WHEN WATER IS PRESENT IN THE TRENCH, PIPE SHALL BE BEDDED IN CRUSHED STONE

TYPICAL STORMWATER TRENCH SECTION

NOT TO SCALE

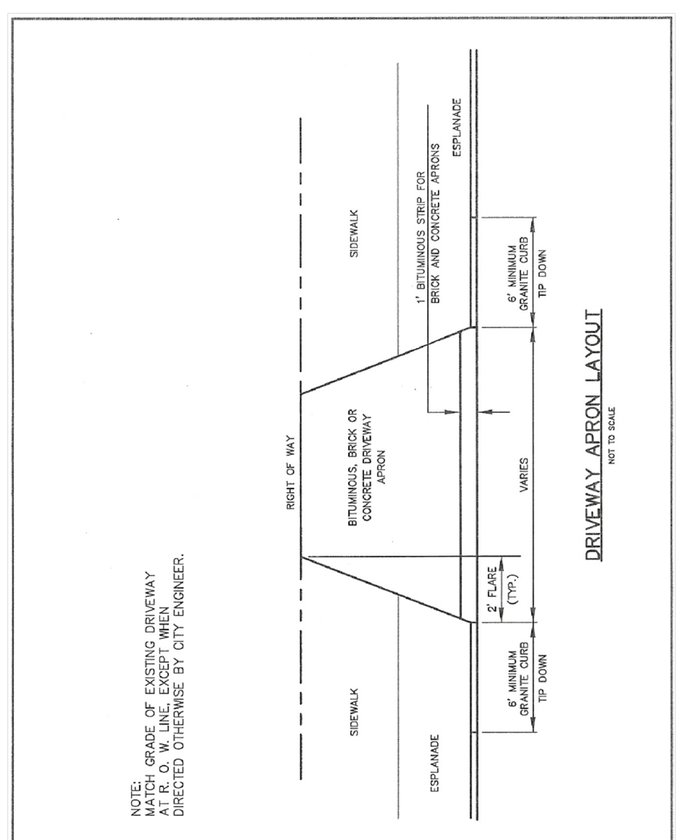

DRIVEWAY APRON LAYOUT

NOT TO SCALE

DATE: AUGUST 2009 REVISED:	CITY OF PORTLAND, MAINE TECHNICAL STANDARDS MANUAL	TRANSPORTATION SYSTEMS AND STREET DESIGN SECTION I	FIGURE: I-9
	DRIVEWAY APRON LAYOUT		

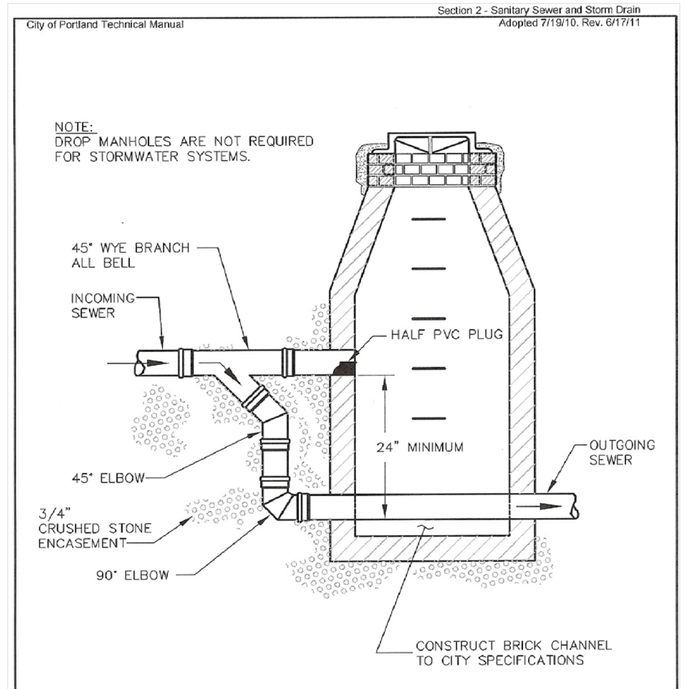

TYPICAL OUTSIDE DROP MANHOLE

NOT TO SCALE

DATE: AUGUST 2009 REVISED:	CITY OF PORTLAND, MAINE TECHNICAL STANDARDS MANUAL	SANITARY SEWER AND STORM DRAIN DESIGN STANDARDS SECTION II	FIGURE: II-3
	TYPICAL OUTSIDE DROP MANHOLE		

THIS PLAN IS FOR REVIEW PURPOSES ONLY AND IS NOT INTENDED FOR CONSTRUCTION OR RECORDING

Revision:	By:	Date:	Change:
1	SMA	10/14/14	REVISED PER TOWN COMMENTS

PROJECT NUMBER: 33229.02	ACAD FILE: 33229-DETAILS.DWG	SCALE: NTS	DATE: AUGUST 4, 2014

Drawing Name:
CONSTRUCTION DETAILS – SHEET 1

Project Name and Location:
PAMELA ROAD EXTENSION
PAMELA ROAD, PORTLAND, MAINE 04101

Prepared For:
TELOS CAPITAL, LLC
2 MILK STREET, PORTLAND, MAINE 04101

STATE OF MAINE — Allen 9218 — LICENSED PROFESSIONAL ENGINEER — 10-14-14

SURVEYING ENGINEERING LAND PLANNING
Northeast Civil Solutions
INCORPORATED
153 US ROUTE 1, SCARBOROUGH, MAINE 04074
tel 207.883.1000 800.882.2227
fax 207.883.1001
e-mail info@northeastcivilsolutions.com

SHEET 8 OF 12

E:\LAND PROJECT\33500\33229 CREST VIEW\PLANSET\33229-DETAILS.DWG