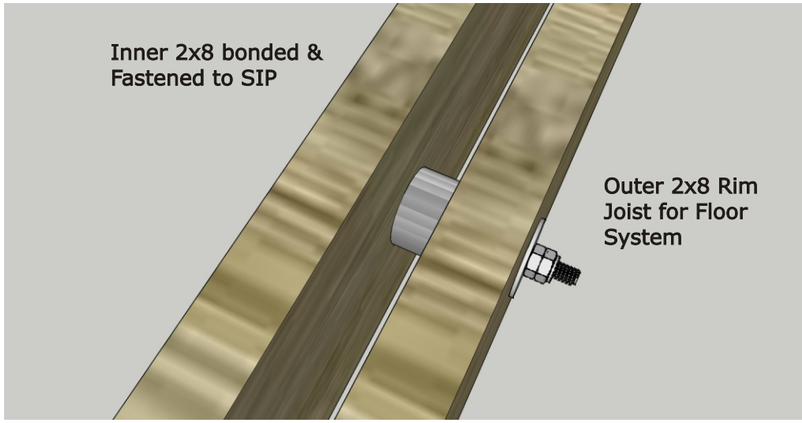

Assembled

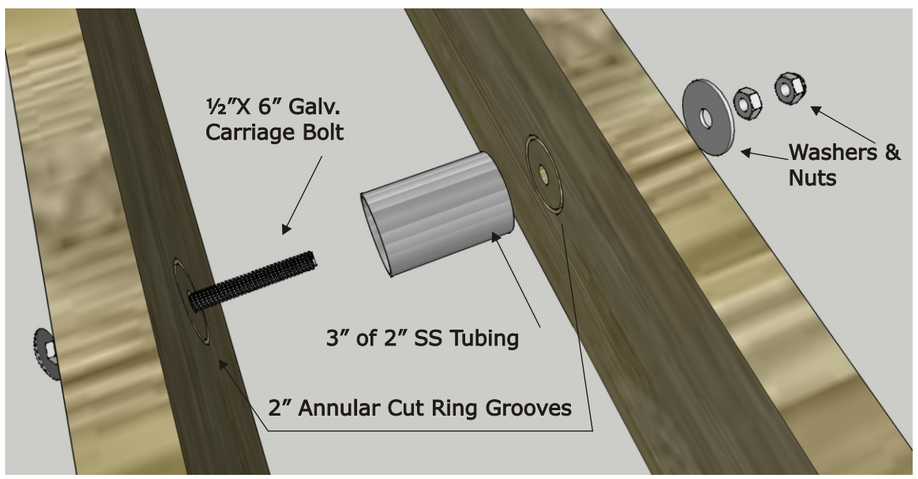

Exploded

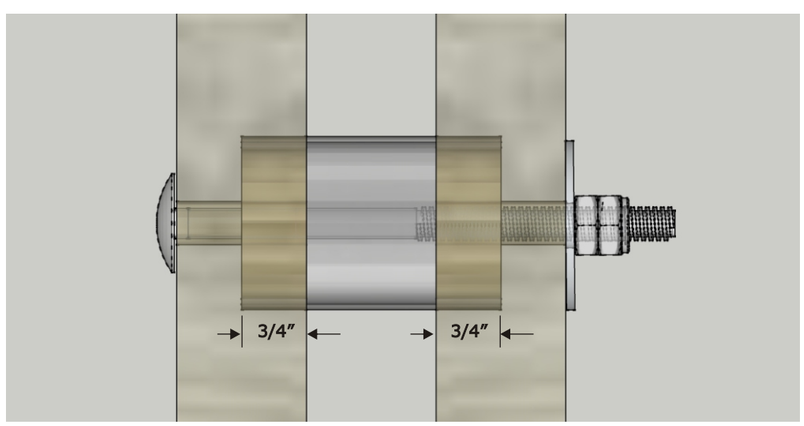

Cross-Section

2" Tube Ends Set in 3/4" Deep Annular
Cut Ring Grooves

Porch Framing Details (2 of 3)

10

Scale: None (as shown)

Materials:

3" of 2" Stainless Steel Tubing
½"x 6" Carriage Bolt, Washers, Nut
Aluminum Drip Edge (Not Shown)
Bituthane Ice & Water Shield (Not Shown)
8" Timberlock Screws

Purpose and Intent:

Special Hi-Strength, No-Rot Ledger Hanging Method for SIP- panels. See 'Framing Details, 1 of 3' for location.

Spacing:

48" O.C.

Revisions

Date	Description

Owners: Frederick A. & Colleen R. Writt
Contact Telephone #: 207-653-5347

Residence & A.D.U. at 15 Morningstar Lane, Portland, ME 04103