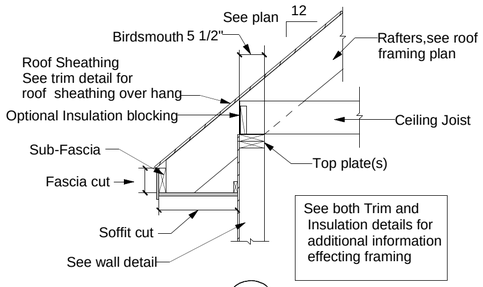

A **Typical at each rafter of roof edge denoted by callout**

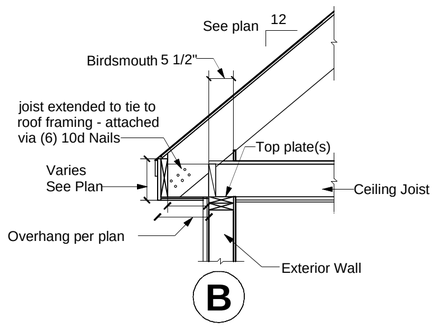

B

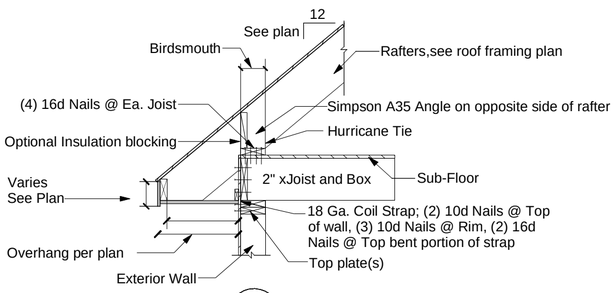

C **Typical at each rafter of roof edge denoted by callout**

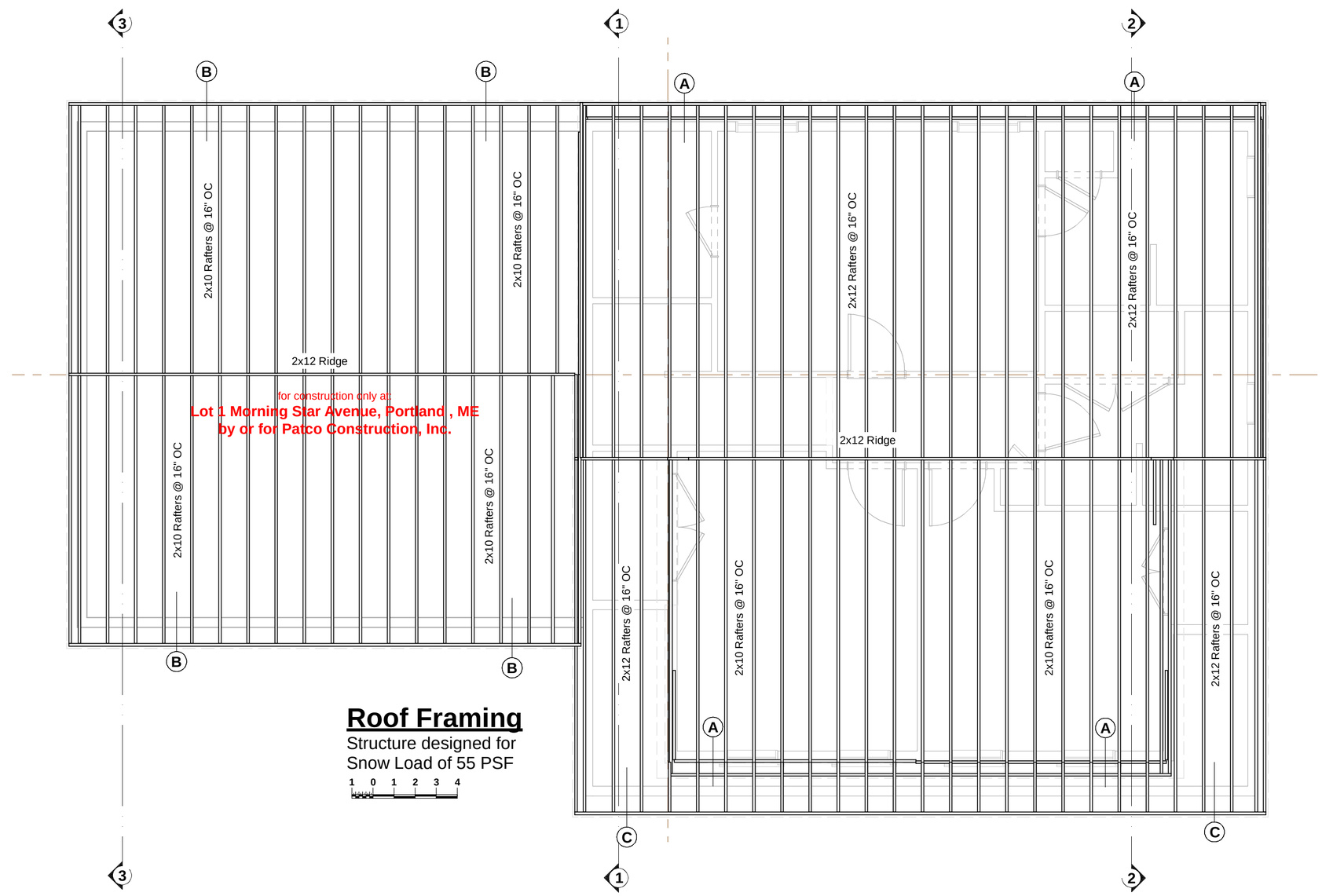

Roof Framing

Structure designed for
Snow Load of 55 PSF

1 0 1 2 3 4

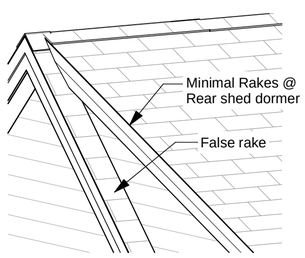

Alternate:
12" False Rake and a 6" Shed Dormer Rake

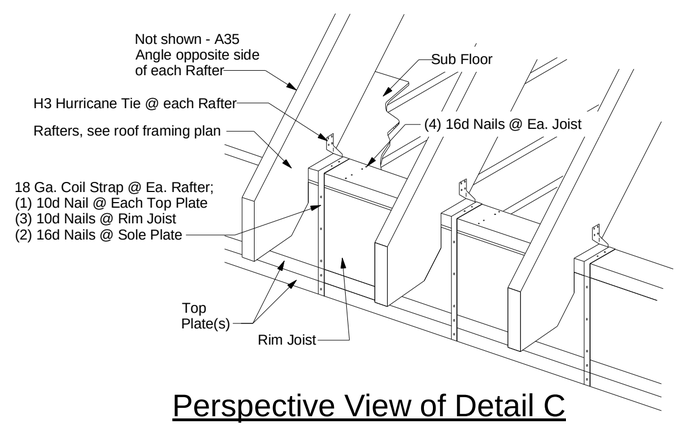

Perspective View of Detail C

Your use of these drawings constitutes an acceptance of responsibility as outlined in "Dear Code Officer" on the first page of these drawings, and on our web site:
http://www.artformhomeplans.com/TermsConditions.a5w

If you have any concerns or questions, please feel free to contact us. We are happy to clarify matters that fall within our scope, as listed on the first page. We can also often provide affordable support for issues that are your responsibility, such as energy design/calcs, or additional detailing.

Artform Home Plans
AFHP Design # 190.124 KR
© 2006-2014 Wendy L Welton 603.431.9559

April Calla, Classic
Lot 1 Morning Star Avenue
Portland , ME

10

1/4"=1'-0" unless noted otherwise / Print @ 1:1
PDF created on: 9/16/2014, drawn by ACJ

Issued for:
Construction

R2: 9.15.14 - Reverse