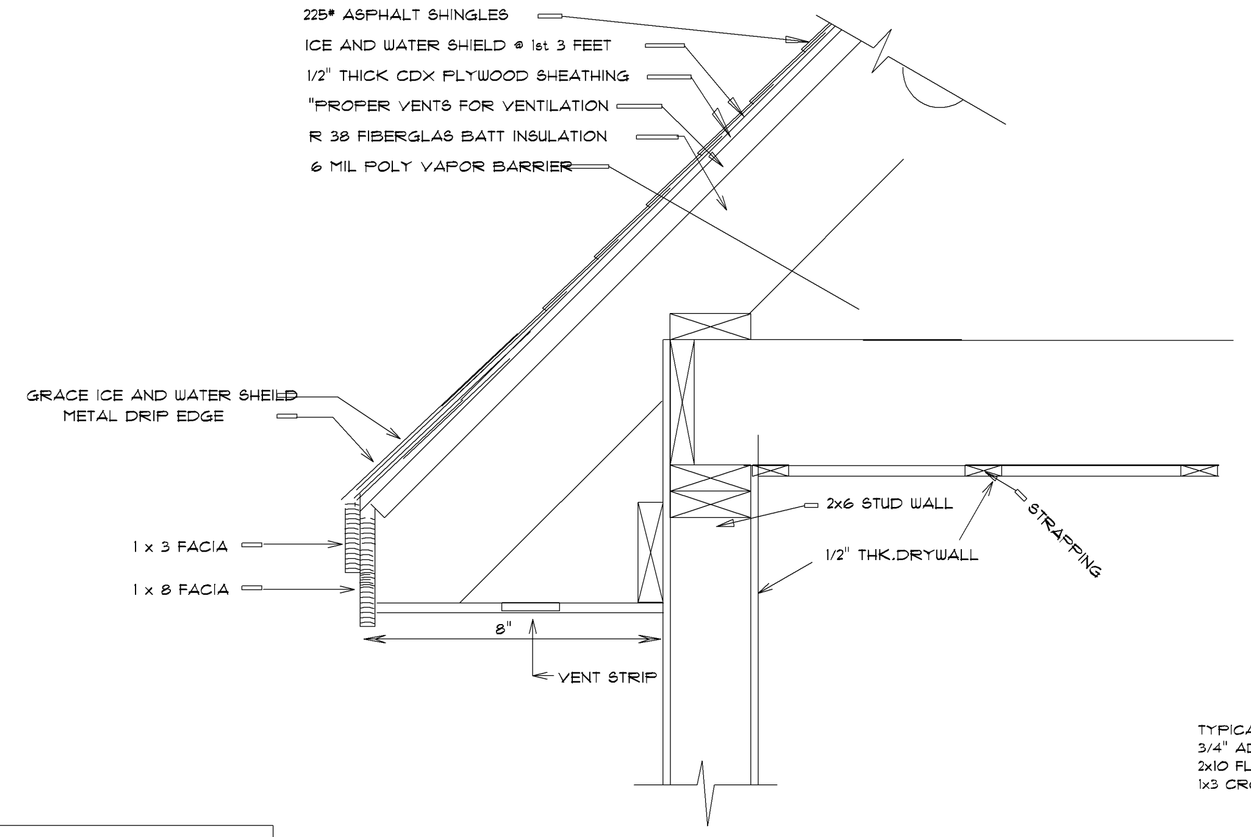

TYPICAL RAFTER TRIM DETAIL

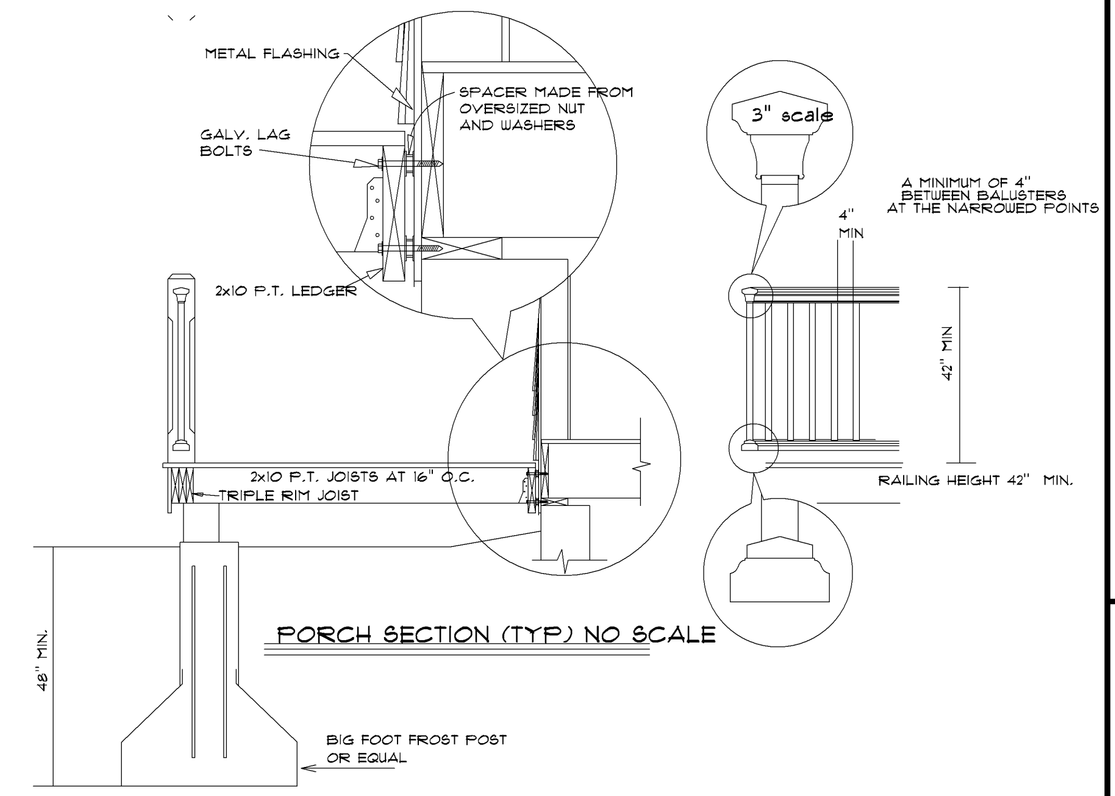

PORCH SECTION (TYP) NO SCALE

FOUNDATION NOTES:

1. ALL FINISH WALL & FOOTING HEIGHTS SHALL BE DETERMINED IN THE FIELD WITH CONTRACTOR.
2. BASEMENT WINDOW LOCATIONS & AND ROUGH OPNGS. SHALL BE CHECKED & VERIFIED IN FIELD WITH CONTRACTOR. OTHERWISE IF NOT SHOWN SHALL BE DETERMINED IN FIELD BY CONTRACTOR.
3. ALL ANCHOR BOLTS SHALL BE 1/2"X1'-0" HOOKED OR EQUIVALENT. 4'-0" MAX. OC. & 1'-0" MIN. FROM ALL CORNERS.
4. ALL LALLY COLUMNS, FOOTINGS, WALLS & BEAMS SHALL BE CHECKED & ENGINEERED BY CONTRACTOR BEFORE FORMS HAVE BEEN SET.
5. ALL DAYLIGHT BASEMENT CONSIDERATIONS TO BE DETERMINED IN FIELD BY CONTRACTOR IF APPLICABLE.
6. ALL CONSIDERATIONS FOR UTILITIES ARE THE RESPONSIBILITY OF THE CONTRACTOR.
7. CONTRACTOR SHALL CHECK ALL DIMENSIONS WITH FLOOR PLAN OR ANY ADDITIONAL EQUIP. (IE. BULKHEAD ETC.) OR PRODUCT DIMENSIONS OR SPECS. ALSO MUST CHECK ALL STRUCTURAL FRAMING FOR LOAD BEARING & FOUNDATION BEFORE FORMS ARE SET.
8. CONTRACTOR SHALL ADJUST WALL AND FOOTINGS SIZES TO SOIL BEARING CAPACITIES AS REQ'D.
9. (DO NOT) BACKFILL MORE THAN 3'-0" BEFORE 1ST FLR. FRAMING-JOIST & SUBFLOOR IS COMPLETE.
10. DRAIN TILE SHALL BE PLACED ON INTERIOR AND EXTERIOR OF FOUNDATION. ALL DRAIN TILE PIPE SHALL BE WRAPPED IN FILTER FABRIC.
11. SEE BUILDING SECTIONS FOR ADDITIONAL REINFORCING REQUIREMENTS.

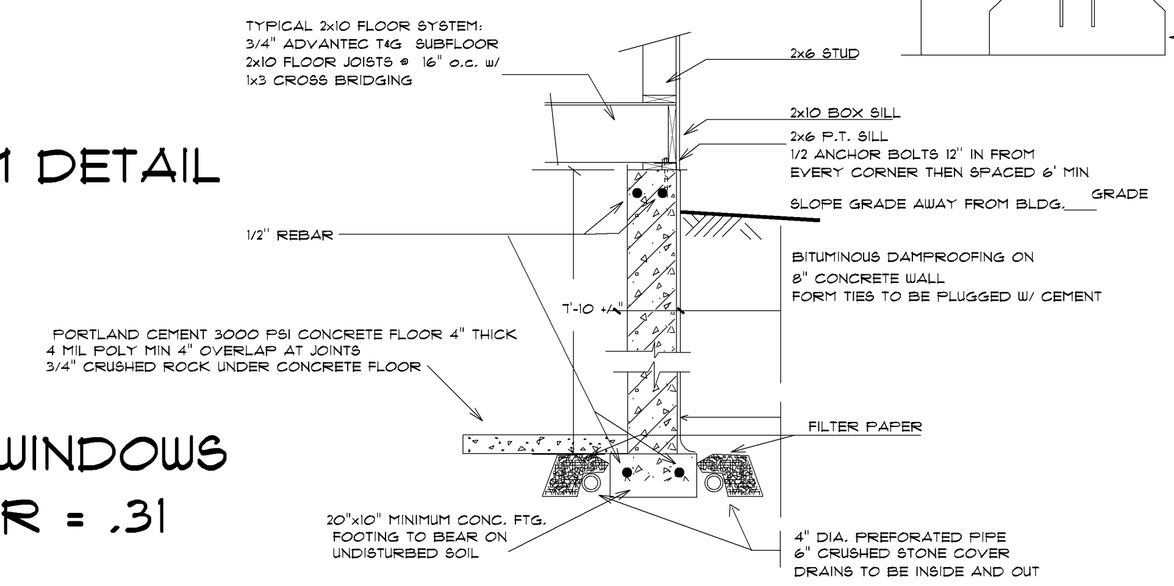

NOTE: ALL WINDOWS
U-FACTOR = .31

TYPICAL FOUNDATION WALL SECTION - MAIN HOUSE

NOTE: LETTER:

P — FASTNERS SPACED 4 INCHES OC AT EDGES, 8 INCHES AT INTERMEDIATE WALL SHEATHING AND 3 INCHES OC AT EDGES. 6 INCHES AT INTERMEDIATE SUPPORTS FOR ROOF SHEATHING.

O — FASTNERS SPACED 4 INCHES OC AT EDGES, 8 INCHES AT INTERMEDIATE SUPPORTS FOR SUBFLOOR AND FOR ROOF SHEATHING APPLICATIONS, FASTNERS SPACED 4 INCHES ON CENTER AT EDGES, 8 INCHES AT INTERMEDIATE SUPPORTS.

N — STAPLES SHALL HAVE A MINIMUM CROWN WIDTH OF 7/16 INCH

L — FOR ROOF SHEATHING APPLICATIONS, 8d NAILS ARE MINIMUM REQUIRED FOR WOOD STRUCTURAL PANELS PANEL SUPPORTS AT 24 INCHES. CASING OR FINISH NAILS SPACED 6 INCHES ON PANEL EDGES, 12 INCHES AT INTERMEDIATE SUPPORTS.

K — CASING OR FINISH NAILS SPACED 6 INCHES ON PANEL EDGES, 12 INCHES AT INTERMIDIATE SUPPORTS.

J — 16 INCHES (20 INCHES IF STRENGTH AXIS IN THE LONG DIRECTION OF THE PANEL, UNLESS OTHERWISE MARKED).

I — 1/2 INCH SHEATHING AND 1-1/2 INCH LENGTH FOR 25/32 INCH SHEATHING. PANEL SUPPORTS AT CORROSION-RESISTANT STAPLES WITH NOMINAL 7/16 INCH CROWN AND 1-1/8 INCH LENGTH FOR

NOTE: LETTER:

H — FOR 1/2 INCH SHEATHING & 1-3/4 INCH LENGTH FOR 25/32 INCH SHEATHING

G — CORROSION-RESISTANT ROOFING NAILS w/ 7/16 INCH DIA. HEAD & 1-1/2 INCH LENGTH

F — FASTNERS SPACED 3 INCHES OC AT EXTERIOR EDGES AND 6 INCHES OC AT INTERMEDIATE SUPPORTS

E — CORROSION-RESISTANT SIDING OR CASING NAIL

D — DEFORMED SHANK

C — COMMON

B — COMMON OR DEFORMED SHANK

A — WALLS, REFER TO SECTION 2305. NAILS FOR WALL SHEATHING ARE PERMITTED TO BE COMMON, BOX OR CASING SPANS ARE 48 INCHES OR MORE. FOR NAILING OF WOOD STRUCTURAL PANEL AND PARTICLEBOARD DIAGRAMS AND SHEAR NAILS SPACED AT 6 INCHES ON CENTER AT EDGES, 12 INCHES AT INTERMEDIATE SUPPORTS EXCEPT AT SUPPORTS WHERE COMMON BOX NAILS ARE PERMITTED TO BE USED EXCEPT WHERE OTHERWISE INDICATED

NOTES	LOCATION	FASTENING	CONNECTION
SEE NOTE: F		8d	PANEL SIDING (TO FRAMING) 5/8"
SEE NOTE: F		6d	PANEL SIDING (TO FRAMING) 1/2" OR LESS
SEE NOTE: C		6d	TO FRAMING) SUBFLOOR-UNDERLAYMENT SINGLE FLOOR (COMBINATION 3/4" OR LESS
SEE NOTE: P SEE NOTE: N 8d, SEE NOTE: D, 6d, SEE NOTE C		2" 16 GAGE 2-3/8"x0.113" NAIL 8d OR 6d	& PARTICLE BOARD WOOD STRUCTURAL PANELS 19/32" - 3/4"
SEE NOTE: 0 SEE NOTE: N SEE NOTE: C , J		1-3/4" 16 GAGE 2-3/8"x0.113" NAIL 6d	& PARTICLE BOARD WOOD STRUCTURAL PANELS 1/2" OR LESS
	FACE NAIL	4 - 3" 14 GAGE STAPLE 4 - 3"x0.131" NAIL 3 - 16d COMMON	LEDGER STRIP
	FACE NAIL	5 - 3" 14 GAGE STAPLE 5 - 3"x0.131" NAIL 3 - 16d COMMON	JOIST TO BAND JOIST
	FACE NAIL	3 - 3" 14 GAGE STAPLE 3 - 3"x0.131" NAIL 2 - 16d COMMON	2-BY RIDGE BEAM ROOF RAFTER TO
	TOENAIL	3 - 3" 14 GAGE STAPLE 3 - 3"x0.131" NAIL 2 - 16d COMMON	2-BY RIDGE BEAM ROOF RAFTER TO
	FACE NAIL	3 - 3" 14 GAGE STAPLE 3 - 3"x0.131" NAIL 2 - 10d COMMON	JACK RAFTERS TO HIP
	TOE NAIL	4 - 3" 14 GAGE STAPLE 4 - 3"x0.131" NAIL 3 - 10d COMMON	JACK RAFTERS TO HIP
	FACE NAIL	4 - 3" 14 GAGE STAPLE 4 - 3"x0.131" NAIL 3 - 10d COMMON	COLLAR TIE TO RAFTER
	AT EACH SPLICE FACE NAIL AT ENDS	3 - 3" 14 GAGE STAPLE 3 - 3"x0.131" NAIL 2 - 20d COMMON	BUILT-UP GIRDER & BEAMS
	STAGGERED ON OPPOSITE SIDES FACE NAIL AT TOP & BOTTOM	3" 14 GAGE STAPLE @ 24" OC 3"x0.131" NAIL @ 24" OC 20d COMMON 32" OC	BUILT-UP GIRDER & BEAMS
16" OC 16" OC 24" OC	16" OC 16" OC 24" OC	3" 14 GAGE STAPLE 3"x0.131" NAIL 16d COMMON	BUILT-UP CORNER STUDS
	FACE NAIL	2 - 3" 14 GAGE STAPLE 2 - 3"x0.131" NAIL 2 - 8d COMMON	EACH STUD & PLATE 1" DIAGONAL BRACE TO
	TOENAIL	3 - 3" 14 GAGE STAPLE 3 - 3"x0.131" NAIL 3 - 8d COMMON	(SEE SECT. 2308.10.1, TABLE 2308.10.1) RAFTER TO PLATE

NOTES	LOCATION	FASTENING	CONNECTION
COMMON NAIL - REF TO TABLE 2308.10.4.1	FACE NAIL	4 - 3" 14 GAGE STAPLE 4 - 3"x0.131" NAIL 3 - 16d COMMON MINIMUM	(SEE SECT. 2308.10.4.1, TABLE 2308.10.4.1) CEILING JOISTS TO PARALLEL RAFTERS
COMMON NAIL - REF TO TABLE 2308.10.4.1	FACE NAIL	4 - 3" 14 GAGE STAPLE 4 - 3"x0.131" NAIL 3 - 16d COMMON MIN.	(SEE SECT. 2308.10.4.1, TABLE 2308.10.4.1) CEILING JOISTS, LAPS OVER PARTITIONS
	TOENAIL	4 - 8d COMMON	CONTINUOUS HEADER TO STUD
	TOE NAIL	5 - 3" 14 GAGE STAPLE 5 - 3"x0.131" NAIL 3 - 8d COMMON	CEILING JOISTS TO PLATE
	16" OC ALONG EDGE	16d COMMON	CONTINUOUS HEADE, 2 PCS.
	FACE NAIL	3 - 3" 14 GAGE STAPLE 3 - 3"x0.131" NAIL 2 - 16d COMMON	AND INTERSECTIONS TOP PLATES. LAPS
	TOE NAIL	3" 14 GAGE STAPLE @ 6" OC 3"x0.131" NAIL @ 6" OC 8d @ 6" OC	RIM JOIST TO TOP PLATE
	TOE NAIL	3 - 3" 14 GAGE STAPLE 3 - 3"x0.131" NAIL 3 - 8d COMMON	OR RAFTERS TO TOP PLATE BLOCKING BETWEEN JOISTS
	LAP SPLICE	12 - 3" 14 GAGE STAPLE TYP, FACE NAIL 12 - 3"x0.131" NAIL 8 - 16d COMMON	DOUBLE TOP PLATES
	TYPICAL FACE NAIL	3" 14 GAGE STAPLE @ 12" OC 3"x0.131" NAIL @ 12" OC 16d @ 16" OC	DOUBLE TOP PLATES
	FACE NAIL	3" 14 GAGE STAPLE @ 8" OC 3"x0.131" NAIL @ 8" OC 16d @ 24" OC	DOUBLE STUDS
	END NAIL TOE NAIL	3 - 3" 14 GAGE STAPLE 3 - 3"x0.131" NAIL 2 - 16d COMMON 3 - 3" 14 GAGE STAPLE 4 - 3"x0.131" NAIL 4 - 8d COMMON	STUD TO SOLE PLATE
	END NAIL	3 - " 14 GAGE STAPLE 3 - "x0.131" NAIL 2 - 16d COMMON	TOP PLATE TO STUD
	BRACED WALL PANEL	3" 14 GAUGE STAPLE @ 12" OC 3"x0.131" NAIL @ 15" OC 16d @ 16" OC	AT BRACED WALL PANEL SOLE PLATE TO JOIST OR BLOCKING
	TYPICAL FACE NAIL	3" 14 GAUGE STAPLE @ 12" OC 3"x0.131" NAIL @ 8" OC 16d @ 16" OC	OR BLOCKING SOLE PLATE TO JOIST
	TOENAIL EACH END	3 - 3" 14 GAGE STAPLE 3 - 3"x0.131" NAIL 3 - 8d COMMON	BRIDGING TO JOIST
	TOENAIL	3 - 3" 14 GAGE STAPLE 3 - 3"x0.131" NAIL 3 - 8d COMMON	JOIST TO SILL OR GIRDER

(SEE NOTES A - M FOR ALL FASTENING NOTES)

FASTENING SCHEDULE (SEE TABLE 2304.9.1 ME.S. RESIDENTIAL CONSTRUCTION CODE FOR COMPLETE DETAILS)

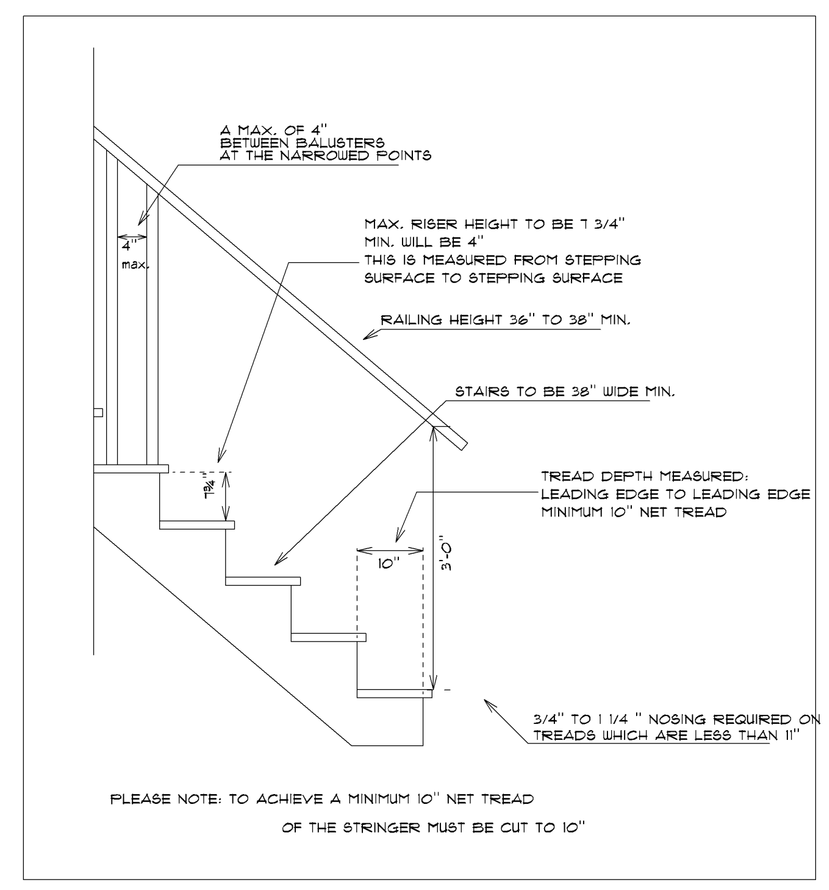

PLEASE NOTE: TO ACHIEVE A MINIMUM 10" NET TREAD OF THE STRINGER MUST BE CUT TO 10"

THESE PLANS AND SPECIFICATIONS HAVE NOT BEEN PREPARED BY A LICENSED ARCHITECT OR ENGINEER. PNL's OF PORTLAND INC AND PALANZA DESIGN ARE NOT ENGAGED IN THE PRACTICE OF ARCHITECTURE OR ENGINEERING. WE DO THEY HOLD THEMSELVES OUT AS SUCH THESE PLANS ARE PROVIDED AS A SERVICE AND IN NO WAY CONSTITUTE A GUARANTEE. THE ULTIMATE RESPONSIBILITY FOR THE INFORMATION PROVIDED ALL DIMENSION AND SPECIFICATIONS TO BE REVIEWED FOR ACCURACY AND STRUCTURAL INTEGRITY BY A REGISTERED ARCHITECT OR ENGINEER AND CONTRACTOR BEFORE ACTUAL CONSTRUCTION CONTRACT SPECIFICATIONS OVERRULE HOUSE PLANS

PROJECT NAME:

AUBURN STREET

MZ PROPERTIES LLC.

REVISIONS

DATE: August 9, 202

SCALE: AS NOTED

DRAWN

FILE

SHEET: ___ OF ___