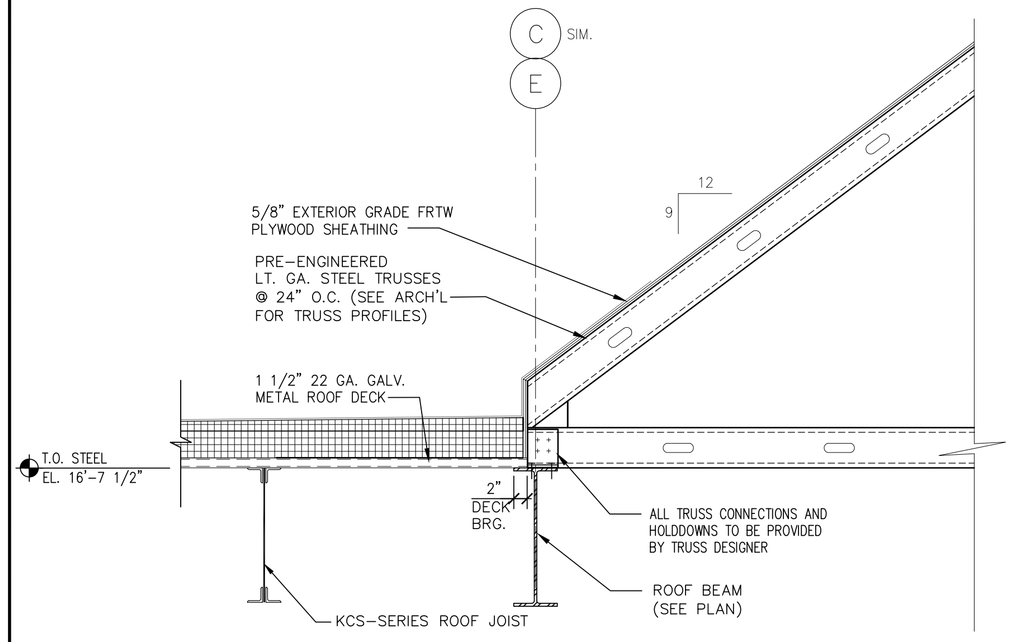

1 S3.3 SECTION AT ROOF TRANSITION
SCALE: 3/4"=1'-0"

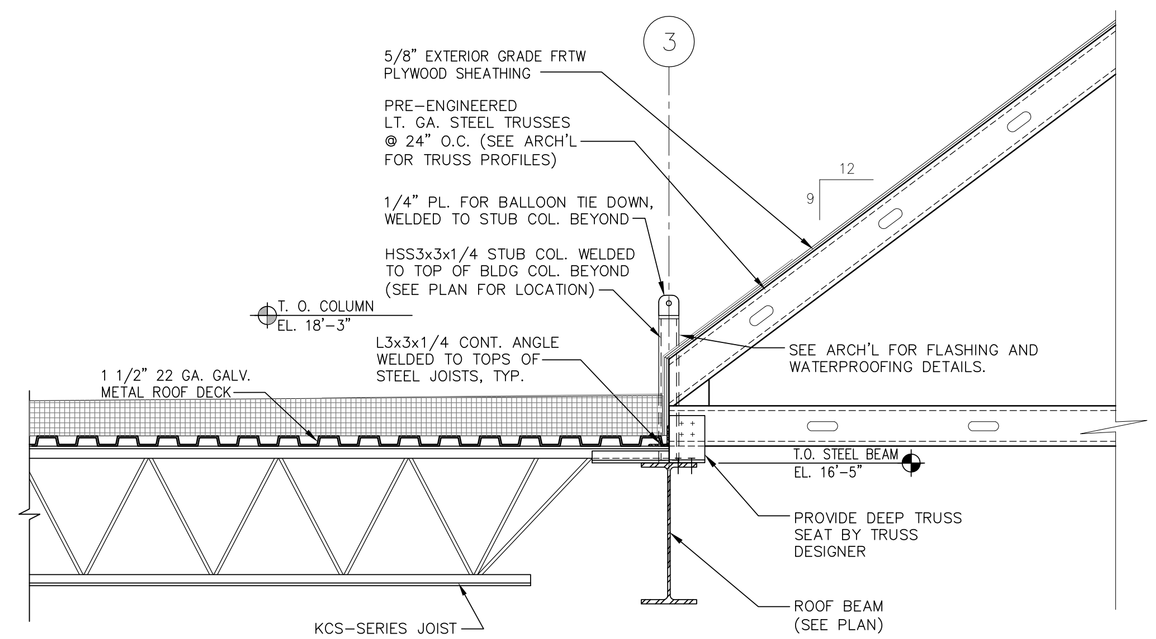

2 S3.3 SECTION AT ROOF TRANSITION
SCALE: 3/4"=1'-0"

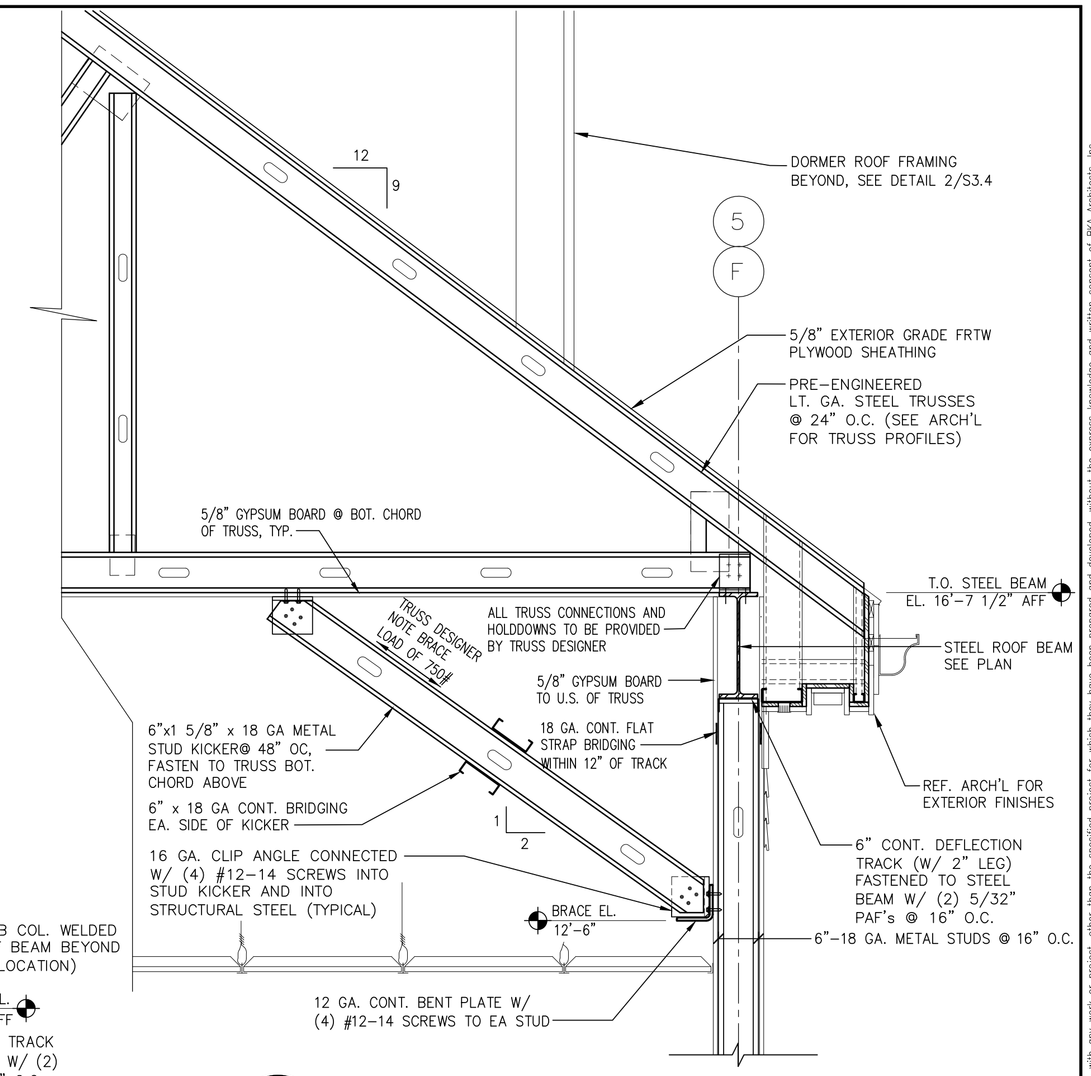

3 S3.3 SECTION AT ROOF EAVE
SCALE: 3/4"=1'-0"

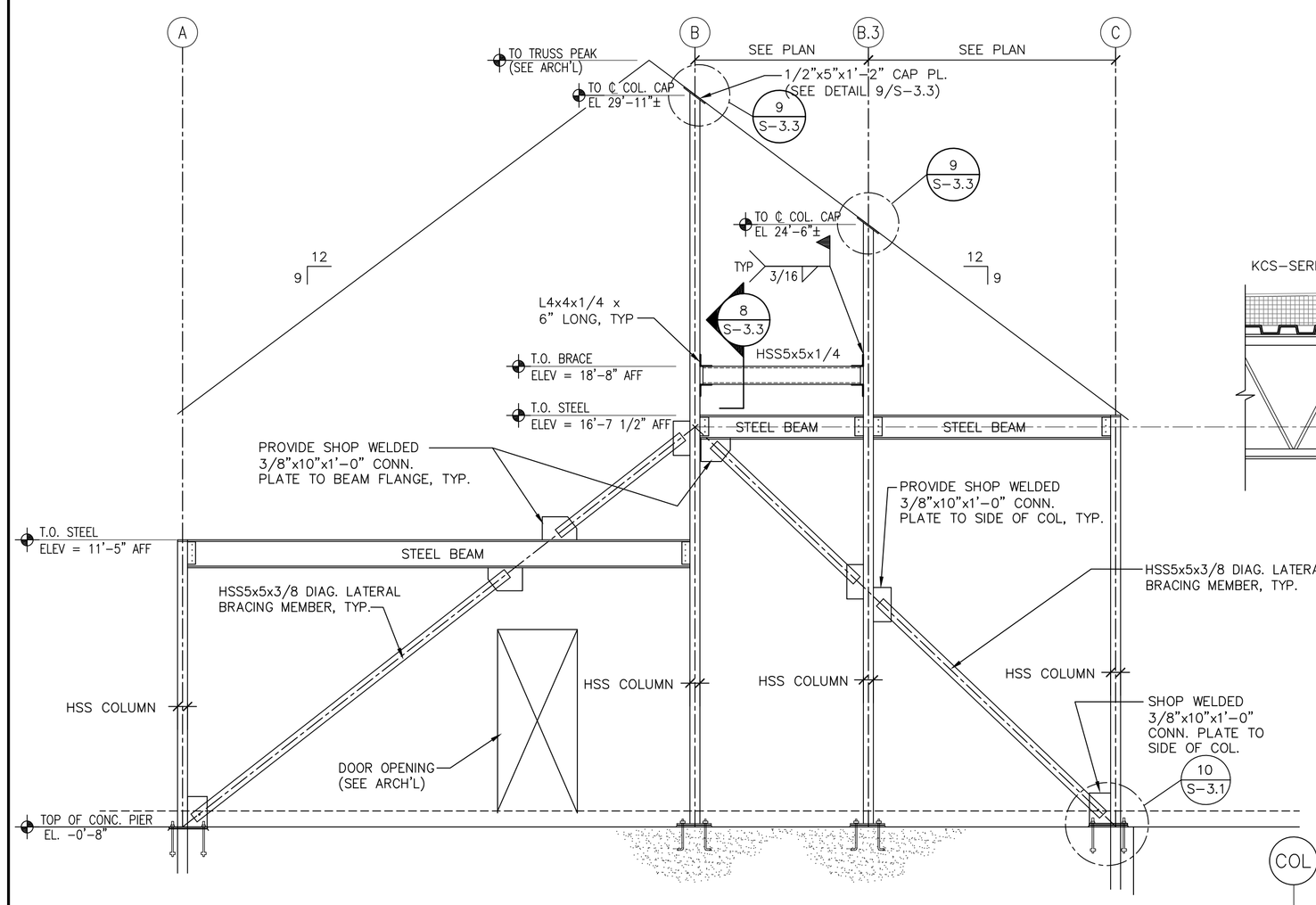

7 S-3.3 ELEVATION
SCALE: NTS

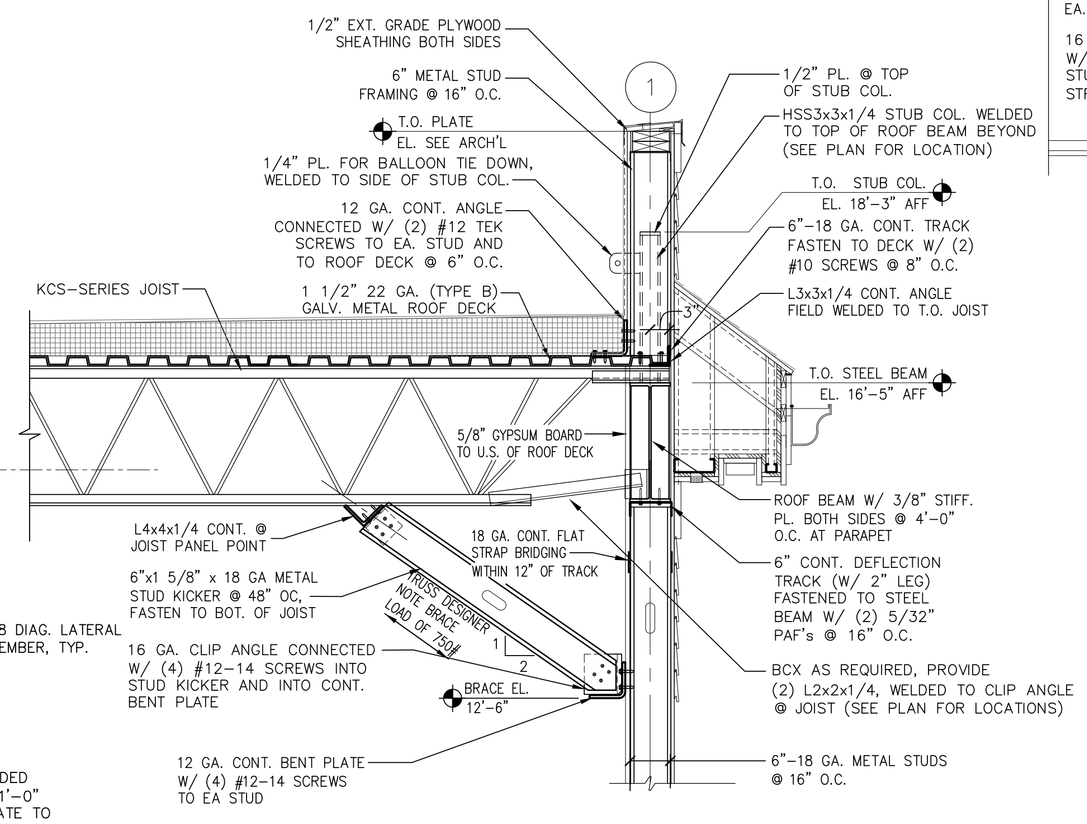

4 S3.3 SECTION AT ROOF PARAPET
SCALE: 3/4"=1'-0"

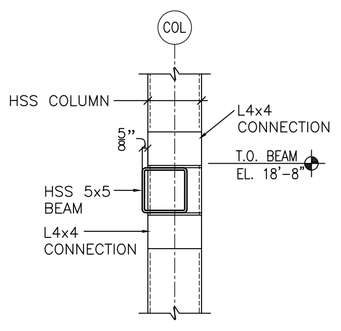

8 S-3.3 SECTION
SCALE: NTS

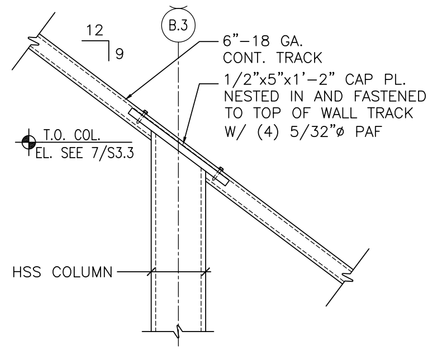

9 S-3.3 DETAIL
SCALE: NTS

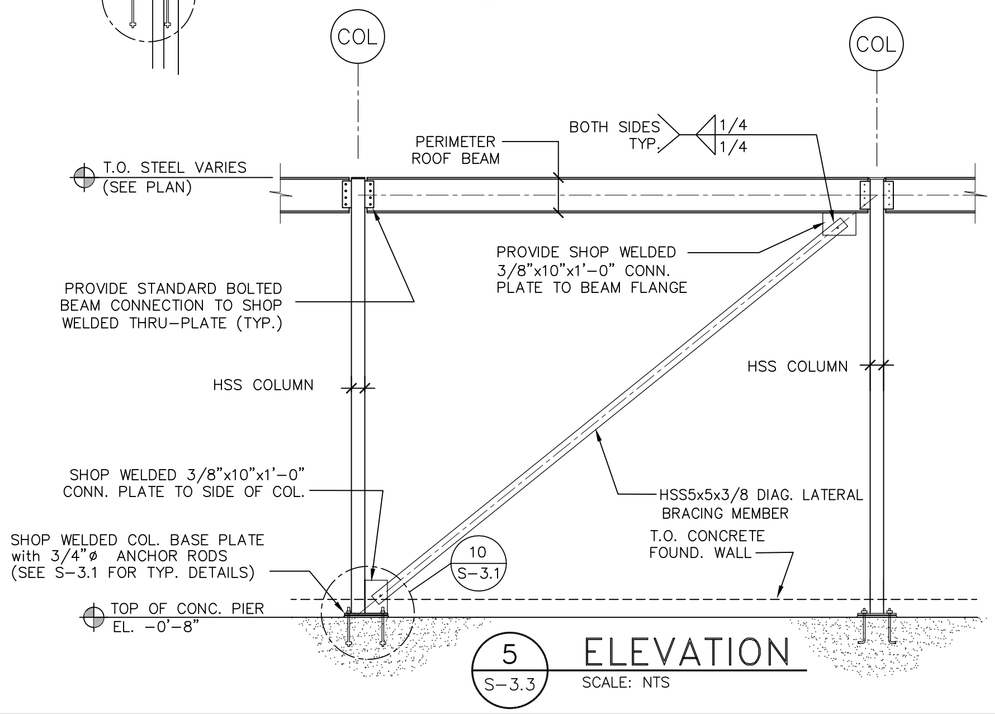

5 S-3.3 ELEVATION
SCALE: NTS

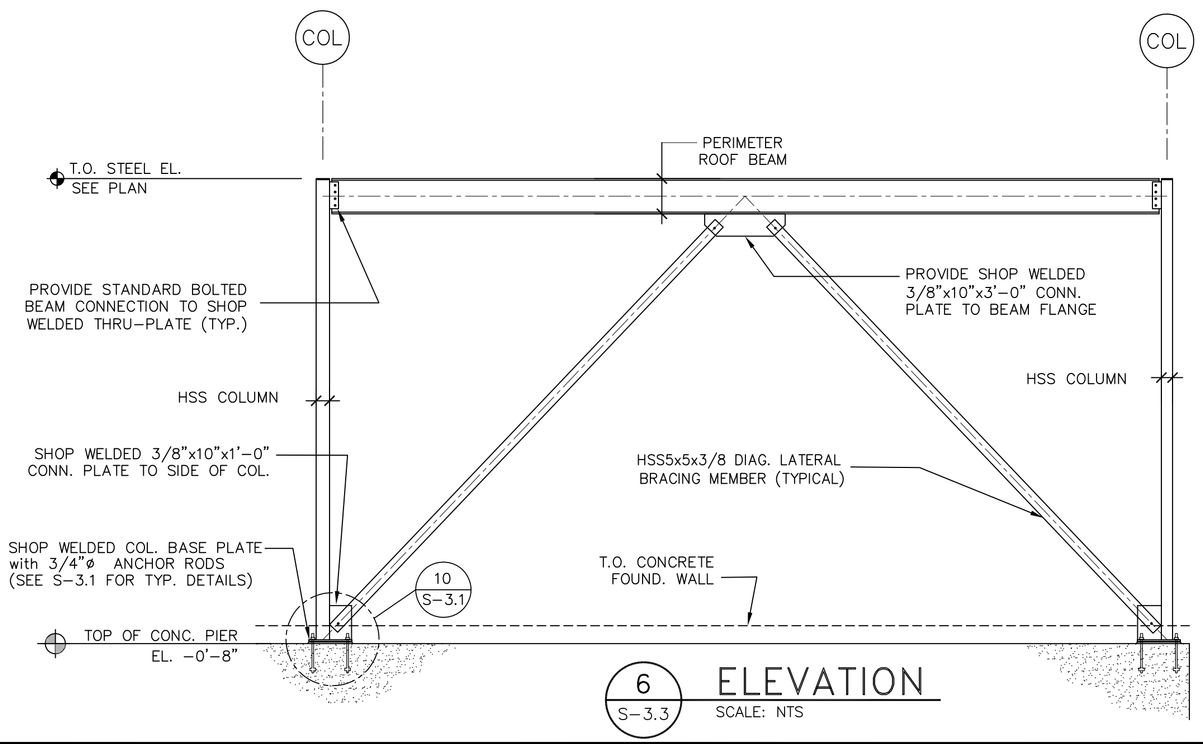

6 S-3.3 ELEVATION
SCALE: NTS

BKA Architects, Inc.
Architecture + Interiors
142 Crescent Street
Brockton, MA 02302
tel : 508.583.5603
fax : 508.584.2914
e-mail : bka@bkaarchs.com

CONSULTANT:

SEAL:

CVS/pharmacy

NEW

STORE NUMBER: 329

NORTHGATE PLAZA
91 AUBURN STREET
PORTLAND, MAINE

DEVELOPER:

A & D REALTY, LLC
5 MILITIA DRIVE
LEXINGTON, MA 02421

REVISIONS:

CHECKED BY:	TG
ENGINEERED BY:	MVC
DRAWING BY:	AG
DATE:	08/31/2009
JOB NUMBER:	209017

TITLE: STRUCTURAL WALL SECTIONS AND BRACING ELEVATIONS

SHEET NUMBER: S-3.3

COMMENTS: ISSUED FOR CONSTRUCTION

Copyright © 2006 by BKA Architects, Inc. The architectural plans, drawings, designs, specifications and other arrangements on this sheet are and shall remain the property of BKA Architects, Inc. No part thereof shall be copied, disclosed to others, or used in connection with any work or project, other than the specified project for which they have been prepared and developed, without the express knowledge and written consent of BKA Architects, Inc.